A HISTORY OF THE CARILLON:

ITS ORIGINS, DEVELOPMENT, AND EVOLUTION

AS A MUSICAL INSTRUMENT

BY

BRIAN SWAGER

Submitted to the graduate faculty of the School
of Music in partial fulfillment of the
requirements for the degree,
Doctor of Music,
Indiana University
September, 1993

Accepted by the faculty of the School of Music, Indiana University, in partial fulfillment of the requirements for the degree Doctor of Music.

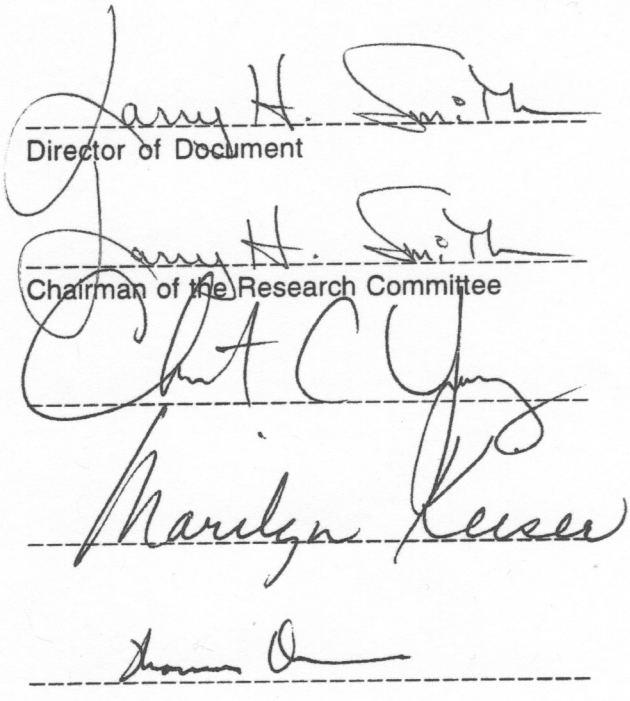

Director of Document

Chairman of the Research Committee

TABLE OF CONTENTS

I. BELLS IN THE MIDDLE AGES AND THE RENAISSANCE 1
MEDIEVAL USAGE 1
THE *VOORSLAG* 5
BELLFOUNDING 8
AUTOMATA 9
POLITICAL AND CULTURAL INFLUENCES 9
FIRST EVIDENCE OF CARILLON PLAYING 10
FIRST KNOWN KEYBOARD 11
II. THE GOLDEN AGE AND THE CARILLON 14
ECONOMIC & CULTURAL CONSIDERATIONS 14
BELL FOUNDING AND TUNING 15
THE CARILLON'S MUSIC 24
III. THE 18TH AND 19TH CENTURIES 27
POLITICO-CULTURAL INTRODUCTION 27
CARILLON BUILDING 27
MUSIC FOR THE CARILLON 29
MATTHIAS VAN DEN GHEYN 35
BURNEY'S IMPRESSIONS 38
THE FRENCH REVOLUTION 39
THE 19TH CENTURY 41
LITERARY OVATIONS 42
IV. JEF DENYN: CATALYST FOR A NEW CARILLON TRADITION . . . 44
INTRODUCTION 44
TECHNICAL ADVANCES 45
INCEPTION OF FORMAL CONCERTS 50
NEED FOR FORMAL INSTRUCTION 54
1922 RINGS IN A NEW ERA 55
FLEMISH PERFORMANCE PRACTICE 58
DENYN'S STYLE OF COMPOSITION 60
ARTISTIC STANDARDS 61
CONCLUSION 62
V. THE TWENTIETH CENTURY 63
BELLTUNING REDISCOVERED 63
REVIVAL OF CARILLON BUILDING 65
WWII & THE PLUNDER OF BELLS 68
BELLFOUNDING AFTER THE WAR 75
TEMPERAMENTS 77
MAJOR-THIRD BELLS 78
CONSOLE STANDARDIZATION 81
POLLUTION 82
CARILLON GUILDS 83
THE DUTCH SCHOOL 84
THE ROLE OF CARILLON MUSIC 84

INTERNATIONAL GROWTH 86
VI. THE BLOSSOMING OF THE CARILLON ART IN AMERICA 88
EARLY MANIFESTATIONS 88
THE CHIME 89
AMERICA'S FIRST CARILLONS 91
WILLIAM GORHAM RICE 95
A NEW AND PROSPEROUS ERA 97
THE GUILD OF CARILLONNEURS IN NORTH AMERICA 101
POST-WW II 103
EARLY AMERICAN CARILLONNEURS AND THEIR MUSIC 104
A NORTH AMERICAN CARILLON MOVEMENT 105
SELECTED BIBLIOGRAPHY 109
CURRICULUM VITAE 118

I. BELLS IN THE MIDDLE AGES AND THE RENAISSANCE

Bells of all types have sounded throughout history, with uses--both sacred and profane--as many and varied as their designs. The path that leads to the development of the musical instrument of our time known as a carillon begins during the Middle Ages.

MEDIEVAL USAGE

The Middle Ages was a time of feudalism, illiteracy, poverty, religious piety, and superstition. Magical properties have been attributed to bells for centuries, and numerous medieval references claim that the sound of bells could rout enemies, witches and wizards, drive away evil spirits, cure the mentally ill, and even force criminals to confess. The rite of baptism of bells was first recorded in a civil ordinance of Charlemagne in 789.[1] When the Church adopted the use of bells, it also adopted the belief that ghosts and demons could be put to flight by their sound, a power henceforth augmented by the protection afforded through association with the divine cult. The spirits controlling the elements were heathenish and, hence, afraid of any sound connected with Christian worship; thunderstorms and tempests, therefore, could be dispersed by their ringing.[2] Another example refers to the bubonic plague which swept

---

[1]Encyclopædia Britannica, 15th ed., S.V. "Percussion Instruments," by Sibyl Marcuse.

[2]Ernest Morris, *Legends O' the Bells* (London: Sampson Low, Marston & Co., [1935]), 12.

through Europe during the 14th century: the words *fugo pestem* (I drive away the pest[3])--and many variations thereof--were inscribed on numerous bells. Some bells were even cast with the inscription *Vox Domini* (Voice of the Lord)!

Town belfries and church towers were the highest structures in medieval and renaissance towns and cities. With no other tall buildings to block the egress of sound, the tolling of a bell could be heard for miles. Before bells were ever combined to form a diatonic series, single bells were used as signals. Official proclamations were announced by the *banklok*, which was normally the heaviest bell in the city. In Flanders it was common to hang the *banklok* in its own tower, the belfry, separate from the church. The belfry with its *banklok* was under the jurisdiction of the city, and became the symbol of municipal freedom and independence. Although the Church dominated life during the medieval period, the increasing power of northern European kingdoms led to the beginnings of capitalism and to the growth of cities. *Clocke Roeland*[4], in Ghent, is perhaps the most famous *banklok*. The bell, which dates from 1315, reads, "*Die gheheeten es Roeland. Als men se luijd, es storme int landt.*" (My name is Roland. When I toll, there is unrest in the land.)[5] Other types of signal bells included the work bell, the market bell, the day bell, the thieves' bell, the evening bell, the fire bell, the death bell, the bell of justice.

Neither candles nor bakery ovens were allowed to burn between the last bells of the evening and the morning bell. The practice originated in parts of England with Alfred

---

[3]All translations in this text are my own, unless otherwise indicated.

[4]For an explanation of the origins of the name *Roeland*, see: Jos D'hollander, "De Roelandactie: een voorbeeld van de Gentse verbondenheid met klok en beiaard," *Bondsnieuws* 102 (December 1990): 46-51.

[5]André Lehr, *Van paardebel tot speelklok* (Zaltbommel: Europese Bibliotheek, 1981), 120.

the Great (died 901), and the ordinance was imposed on all of England by William the Conqueror in 1068. It served to prevent fires, to prevent nocturnal gatherings of rebellious subjects, and to regulate social custom. It was known in French as the *couvre feu* or "cover fire," and gave us the word "curfew."

The ringing of the angelus, a medieval custom which has continued through the 20th century, signals devotions at sunrise, noon, and sunset. The angelus consists of a pattern of three strokes sounded thrice.[6] According to Percival Price, after the three strokes were sounded thrice, nine strikes followed.[7]

In cities that possessed several bells, each bell would serve a particular function. In that the art of casting and tuning bells had not yet been greatly refined, each bell was likely to have its own distinct tone quality and character, making it easily discernible from the others. In some cases, such as the Roland bell in Breda (the Netherlands), a single bell did double duty: "*Myn naam is Roelant. Als ick luy aan eenen kant, dan is tot Breda allarm of brant. Als ick gaa aan beyde syden, dan is Breda in groot verblyden.*" (My name is Roland. When I toll on one side, [the city of] Breda is in danger or on fire. When I swing to both sides, Breda rejoices greatly.)[8] The most predominant function of tower bells in our own time--that of marking the time--was of even greater importance in earlier epochs. When only the wealthiest could afford a timepiece of any kind, common man relied upon the civic authorities to provide this information. Hourbells were placed in towers in France, England, Italy, and the Low Countries in the first half of the 14th century. Large mechanical clocks had already appeared in church

---

[6]Lehr, *Paardebel*, 129, 135.

[7]Percival Price, *Bells and Man* (Oxford: Oxford University Press, 1983), 121.

[8]Lehr, *Paardebel*, 121.

and city hall towers of England and France in the 13th century. During the second half of the 14th century, several made their way into towers in the Low Countries. A small bell was attached to some of these clocks, which would alert the tower watchman, or *Jantje* (Johnny) to strike the hour bell. Most 14th-century clockworks, being fully automatic, had mechanisms to strike the hour bell. Some operated a *jacquemart* (Jack-o'-the-Clock), a wooden figure holding a hammer which was used to strike the hour. More complex public clocks had elaborate displays such as joustings, processions, or religious scenes. For example, since 1356 the jacks in the clock of the Liebfrauenkirche in Nürnberg, Germany appear as the seven Electors coming to swear allegiance to the Emperor Karl IV evoking the Golden Bull while heralds trumpet on *buisines*. J. J. Raven contends that there exists a controversy over the derivation of the word *jacquemart*, suggesting that there was a clockmaker, Jacques Marck, calling at Lille in 1422, himself apparently a grandson of one of the same name, living at Courtray in 1360.[9]

The prevalence of bells in Europe and the extent to which their sound permeated society cannot be underestimated. The association of time with bells activated by automatic clock mechanisms is evident in the English expression of time, *O'Clock*, or, of the clock. Also, the Dutch word *klok* means both bell and clock, ordinarily the former. Bishop Latimer, a champion of the Reformation, made it clear that scarcely a spot exists, anywhere in England, that is beyond earshot of church bells when he said:

> You know, when there was a storm or fearful weather, then we rang the holy bells; they were they that must make all things well; they must drive away the devil! But I tell you, if the holy bells would serve against the devil, or that he might be put away by their sound, no doubt we should soon banish him out of England; for I think that if all the bells in England should be rung together at a certain hour, there would be almost no place

---

[9]J.J. Raven, *The Bells of England* (New York: E.P. Dutton & Co., 1906), 276.

but some bells might be heard there, and so the devil should have no abiding place in England.[10]

THE *VOORSLAG*

It became evident that some sort of warning was necessary to attract the listeners' attention, announcing that the hour bell was about to be struck such that the first note or two would not go uncounted. A simple "ding-dong" on two bells--often a falling minor third--was common, and has served as the source for a musical figure referring to time and clocks in a number of compositions.[11] As early as 1412 such warning bells were to be found in the belfry in Ghent, referred to as *weckersvorsclaghers* (*wecker* = alarm; *vor* = before; *sclagers* = strikers). These small bells were known to the French as *appeaux,* and as *appeelkens* in Dutch speaking regions--both words stemming from the French *appeler,* "to call". Depending on the creativity and technical abilities of the clockmaker and the number and tonal integrity of the bells, the *voorslag*[12] sometimes took on a melodic character. Melodies could be played automatically by the clockwork, or tapped out with a hammer by the *batteleur de cloches* ("jack", or bell man). Currently, the most commonly heard *voorslag* in the United States is the Westminster Quarters, made famous by the clock in St. Stephen's Tower in the Houses of Parliament in London.

---

[10]Price, 87.

[11]The "ding-dong" or "cuckoo". For example, Handel's Organ Concerto #13, and M.van den Gheyn's *Cou-Cou Prelude* for carillon, not to mention the "morning bells" in *Frère Jacques.*

[12]Known in French as *appeaux* (from *appeler*, to call), and in old Flemish as *appeelkens* and *appeelen*, there is no English word. Henceforth, this text will use the commonly employed, modern Dutch word *voorslag.*

A *voorslag* is activated mechanically by means of a revolving drum, or *trommel.* The drum is outfitted with pegs, either permanent or moveable, which move a row of levers as the weight-driven drum turns. The levers, in turn, cause hammers to fall against the sides of the bells. Even in England, this system was not uncommon by the middle of the 15th century, where tunes such as *Requiem aeternam* extended over as many as five notes. A set of three bells was installed in the clock in the belfry in Oudenaarde (Flanders) in 1496, and by 1501 there were six bells. A drum ("*eenen wiele")* was made for Oudenaarde in 1504 which played *Veni Sancti Spiritus* on the hour and *Peccatores* on the half hour. In that same year, the abbot of the Flemish Abbey of Averbode ordered a harmonized series of 14 bells for the *voorslag* in the Abbey tower. It played the melody of the sequence *Sancti Spiritus adsit nobis gratia* on the hour, and that of *Virginis Mariæ Laudes* on the half hour.[13]

At this point it is interesting to look at the carillon's namesake, which seems to have been inspired by the *voorslag.* A few theories exist for the origin of the English word *carillon.* The most plausible refer to French words with the stem *quadr-* (four) such as *quadrillon.* During the last third of the 15th century, tower clocks in northern France and in the southern Lowlands commonly had three *appeaux* or *appeelkens* (warning, or *voorslag* bells) and an hourbell. The French named this set of four bells a *carillon.* The verb *carillonner* (to ring bells, play the carillon, or exclaim noisily) seems to spring directly from *quadrillonner,* which Marc Vernet describes as: "'toucher sur quatre cloches' disposées en série harmonisée, et les faire résonner alternativement." ("play four bells" arranged in a harmonized series, and ring them

---

13G. van Doorslaer, "Ontstaan van het eerste Beiaardklavier," in *Beiaardkunst; Handelingen van het Eerste Congres, Mechelen, 1922,* ed. L. Godenne (Mechelen: L. Godenne, 1922), 117.

alternately.)[14] Originally, the French distinguished between their sets of four bells and the considerably larger sets which developed in the regions to the north by referring to the latter as *carillons de Flandre.* The word *carillon* continues to be employed by the French with reference to any collection of bells, regardless of their number. The English language has adopted both the name for the instrument, *carillon*, and the name for the player, *carillonneur*, from the French words, with no changes in spelling.

The act of manually sounding a number of stationary bells was known in Flemish as *beieren*, the performer a *beierman*, and the Flemish word for carillon, *beiaard.* Festivals, fairs and public celebrations abounded in medieval society, and the *beieren* of tower bells contributed to the exuberant atmosphere.

As the 15th century drew to a close, the stage was set for the carillon to evolve as a musical instrument in its own right. Various medieval bell-playing practices had contributed to this readiness. The cymbalum was a set of four to fifteen small bells, suspended from a frame or horizontal rod, and played by striking the outside of the bell with a hammer. Its use closely paralleled that of the medieval portative organ, both being used to accompany chant.[15] Nola, campana, and tintinnabulum were other medieval Latin words for bell. *Nola* and *campana* come from the city of Nola in the region of Campania in Italy. Percival Price contends that a distinction was made in medieval Latin, between manners of sounding bells.[16] The verb *pulsare* described the act of striking a bell with a hammer, whereas *nollare* referred to the use of a clapper hanging

---

[14]Marc Vernet, *Les Carillons du Valais*, ed. G. Krebs (Bâle: Société suisse des traditions populaires, 1965), 13.

[15]Jos. Smits van Waesberghe, *Cymbala (Bells in the Middle Ages)* (Rome: American Institute of Musicology, 1951), 18.

[16]Price, 190.

inside the bell. A single performer could control several ropes and attain a musically expressive result not obtainable from an automatic mechanism. Two illustrations in the 13th-century *Cantigas de Santa María* show both methods. The playing of small cymbala found its counterpart on a larger scale in the ringing of tower bells. Tower bells were also played either by means of a hammer, or a rope attached to the clapper.

BELLFOUNDING

Two significant technical advances were made in bellfounding during the first half of the 14th century. The use of a strickle, a bevel-edged finishing tool used in shaping molds in sand, was adopted for modeling bells. This afforded a greater degree of uniformity in the fabrication of bells, as well as making conditions favorable for researching the optimal profile and thickness for a musically pleasing bell. Earlier bowl-shaped, beehive-shaped, and conical bell models were abandoned for the current model. A more consistent series of bells was conducive to thinking of tower bells in terms of a melodic instrument, with a coherent musical scale.

AUTOMATA

Automata of all sorts were a great fascination of the Middle Ages. It is not surprising, therefore, that the same technology that had been used as early as the 9th century in operating an automatic flute player[17]--that of a revolving drum with pins--would be applied to bells in towers. Whereas there is a limit to the number of bells one person could control, whether by means of a hammer or by way of ropes attached to the clappers, a mechanical chiming mechanism offered a wider range of possibilities.

---

[17]André Lehr, "The automatic flute player of the Musa brothers," *Bulletin of the Musical Box Society International* 29:1 (spring-summer 1983): 25-34.

Naturally, the medieval bell-ringer sought a practical manner of controling the same number of bells manually.

POLITICAL AND CULTURAL INFLUENCES

As the Middle Ages drew to a close, towns grew into cities and the rise of European nationalism rivaled the dominance of the Church and the Holy Roman Empire. Growing capitalism led to a spirit of competition between cities. Since bells were proud symbols of municipal independence, it follows logically that civic rivalry has been reflected in a constant aspiration for the heaviest bell or the greatest number of bells. The Renaissance spirit of humanism began to shift the focus away from music written in praise of God, toward music written for art's sake and for the benefit of man. The music of the bells was understandable and delightful to man as well as God. A close partnership between art and science developed, opening the door to an analysis of the tonal quality of bells and to a scientific approach toward its refinement and improvement. Music flourished in every sector of Renaissance society, and its culture--perhaps more than any other era in music history--was graced with a profusion of great composers, of performers both professional and amateur, and of types of musical instruments. The first stringed clavier instruments--the harpsichord and the clavichord--emerged in the second half of the 14th century, and were in use, respectively, from the 15th and 16th centuries. Musical activity in the duchy of Burgundy (the area comprising eastern France, Wallonia, Flanders and the Netherlands) was so intense that the period from the 15th century through the first half of the 16th has become known as the "age of the Netherlanders." The time was ripe for a new bell instrument to come of age on such fertile ground.

FIRST EVIDENCE OF CARILLON PLAYING

The next stage in the carillon's evolution can only be sketched by fragmentary accounts. A monk from the Abbey of St. Michael in Antwerp reports in the first half of the 16th century that the first carillon playing in the Antwerp Cathedral was heard in the year 1480. The performer was characterized as "*eene sot van Aelst*" (a fool from Aalst). This report is confirmed in the diary of Ortelius[18], a contemporary of the monastic. The identity of the man from Aalst remains a mystery, although his legendary deed inspired the creation of a fictitious name, one Barthélemi Coecke.[19] In a Flemish chronicle published in Antwerp about 1530[20], one reads:

> In desen tijd woonde een Jonckman te Duynkercke, ende was daer clockluydere, ghenaemt Jan van Bevere, dye welcke op syne clocken speilde alle maniere van ghestelde liedekins, ende alle hymnen, ende sequencien, Kyrieleyson, ende alle kerckelicke sanghen. Twelcke men daer te voren noeyt gheoort en hadde, ende was een grote nyeuwicheyt, ter eeren van Gode.
>
> A young man named Jan van Bevere lived in Dunkirk at that time and was a bell-ringer. He played all sorts of compositions, lots of hymns, sequences, Kyries, and religious songs on his bells. His playing, the likes of which had never been heard, was a great novelty, to the honor of God.

According to Nikolaas Despars of Bruges, Van Beveren was playing already by March,

---

[18]Ortelius dates the event 1481.

[19]Lehr, *Van paardebel tot speelklok*, 157.

[20]Portions of the same text are quoted in the following three sources, with varying citations. André Lehr cites a reference to the year 1478, in *Die excellente cronike van Vlaenderen*, published in Antwerp in 1531. G. van Doorslaer cites a reference to the year 1477, in *die exellente Cronike van Brabant*, published in Antwerp in 1530. Prosper Verheyden cites a reference to the year 1477, in *die excellente Cronike van Vlaenderen*, published in Antwerp in 1531.

1478. He wrote in 1562 in the *Cronijcke van den land een graefscepe van Vlaenderen*: "Binnen welcker middelen tijt men te Dunckercke eerst hoorde ghestelde zanck up die clocken van der kercke spelen, byeenen joncman gheheeten Jan van Beveren."[21] (In the meantime, arranged songs were played on the bells of the church in Dunkirk for the first time by a young man named Jan van Beveren.) There is no record of how many and what size of bells Jan van Bevere had at his disposal at the St. Eliseus Church in Dunkirk, nor any evidence of just how he managed to play them.

In the first-mentioned chronicle one reads, under the year 1482: "en int selve laer begonst men te spelen op clocken tAntwerpen alder donde tyecken die seel wel soecken."[22] The last line is decidedly unclear. Dutch campanologist André Lehr suggests that it could be translated as: "t'Antwerpen aldaer doende trecken die seel met stocken"[23] (and in the same year the bells were played there in Antwerp with sticks [batons] that pulled the rope). If that were indeed the case, it is still uncertain to what extent the arrangement of the sticks or wooden levers may have resembled a keyboard; nonetheless, the use of some system of levers would represent a significant stage in the evolution of the carillon as a keyboard instrument.

FIRST KNOWN KEYBOARD

In 1510, however, a clear reference to a carillon keyboard is made in the

---

[21] A. Van Werveke, "De ontwikkeling vn het klokkenspel te Gent," in *Beiaardkunst; Handelingen van het Eerste Congres, Mechelen, 1922*, ed. L. Godenne (Mechelen: L. Godenne, 1922), 130.

[22] Prosper Verheyden, *Beiaarden in Frankrijk* (Antwerp: De Sikkel, 1926), 116.

[23] André Lehr, *Beiaardkunst in de Lage Landen* (Tielt: Lannoo, 1991), 94.

financial records of the city of Oudenaarde.[24] Jan van Spierre was paid for nine "clepels in de weckers van der orloge" (clappers in the bells of the clock) and " een clavier in torrekin om te beyaerdene" (a keyboard in the tower to play the carillon). Keyboards were attached to tower bells in at least six other Flemish cities in the following half century: Bruges, Antwerp, Louvain, Ghent, Mechlin, and Aalst.[25] There was no real standard for the number of bells in a carillon, and over the course of the 16th century the compass was gradually extended. An average carillon would have had bells covering two diatonic octaves with the addition of two or three chromatic tones. By the beginning of the 17th century, the carillon in the belfry of St. Nicholas in Brussels comprised 38 bells spread over three-and-one-half octaves.

That the city of Mechelen established itself as the center of the carillon art from the very beginning was in no small measure due to the fact that two families of bellfounders--Waghevens and Van den Ghein-- produced over 50 carillons there during the 16th century and the first half of the 17th. Other founders of the period worthy of note are the Both family of Utrecht and the Van Trier family of Aachen. Jacob de Meyere, a Flemish historian, wrote in 1530[26]:

> De Vlamingen overtreffen de andere bewoners van de Nederlanden door de pracht en de weelde van hun kerken, door de grootte en den schoonen klank van hun klokken. Op die klokken, net
>
> The Flemings surpass the other inhabitants of the Low Countries in the splendor and opulence of their churches, and in the splendid, beautiful sound of their bells. On those bells, just as on

---

[24]Doorslåer, 118.

[25]Note that the spelling of some city names differs, depending on the language being used (English, Dutch, or French). For example: Bruges=Brugge=Bruges. Antwerp=Antwerpen=Anvers. Louvain=Leuven=Louvain. Ghent=Gent=Gand. Mechlin=Mechelen=Malines.

[26]Werveke, 129.

als op citharen, spelen ze liederen van afwisselenden aard.

citterns, they play a variety of songs.

II. THE GOLDEN AGE AND THE CARILLON

The Dutch commonly refer to the 17th century as *de gouden eeuw* (the golden age). It was truly a period of great progress, prosperity, and cultural achievement, and the amelioration of the art of fabricating and tuning carillon bells occurred in a golden measure.

ECONOMIC AND CULTURAL CONSIDERATIONS

Dutch foreign trade and colonization activity had an impact on the carillon. The United East- and West-India Companies were formed in 1602 and 1621 respectively.[1] Through ports such as Antwerp and Amsterdam, overseas trade provided the cities of the Low Countries with the financial means to support bellfounders in their expanding endeavors. The Dutch settled in New Amsterdam (Manhattan) in 1625, and in 1642 they discovered Tasmania (Australia) and New Zealand. It is notable that Dutch and Spanish expeditions of this period reached most of the few countries outside Western Europe where carillons can be found today.

The early 17th century was a time of intellectual and artistic brilliance. The shop of the famous Antwerp printer Christopher Plantin was passed on to Jan Moretus who won international repute. This was a major era in the history of philosophy, and the philosophy of René Descartes greatly influenced the thought of the 17th century.

---

[1]J.A. Kossmann-Putto, and E.H. Kossmann, *The Low Countries; History of the Northern and Southern Netherlands* (Rekkem, BG: Stichting Ons Erfdeel), 27.

This Frenchman spent a considerable part of his life in Holland, where he succeeded in publishing various daring treatises including *Discours de la méthode*, and promoting a philosophy which emphasized reason and rational thought, inspiring an intellectual revolution. A direct result of this philosophical movement was the development of a rational method for tuning bells which will be discussed later in this chapter. Artistically, painting of the period was dominated in the south by Pieter Paul Rubens of Antwerp. Dutch painting reached its high point in the 17th century with masters such as Rembrandt, Vermeer, and Frans Hals. The greatest Dutch poet, Joost van den Vondel (1587-1679), was sufficiently inspired by the carillon to write *Op het Klokmuziek t' Amsterdam* (On Bell Music in Amsterdam) in which he sings praises to both the instrument and its founder.[2]

Although the Republic of United (Dutch) Provinces had been established in 1581, it was not recognized by Philip IV, the King of Spain, until 1648, ending the 80 year struggle against the Spanish. The southern Low Countries were known as the Spanish Netherlands until the beginning of the 18th century. Though they were not to become two completely independent countries for another two centuries, the territories we now know as Belgium and the Netherlands had cultures with both common and disparate elements. Their bell traditions developed just as their cultural heritage developed, following strikingly similar paths, with notable distinguishing characteristics.

BELL FOUNDING AND TUNING

Travelling from town to town and from parish to parish, itinerant and migrant journeymen had been founding bells across western Europe since the beginning of this

---

[2]William Gorham Rice, *The Carillon in Literature; A Collection from Various Authors with Some Notes on the Carillon Art* (New York: John Lane Company, 1916), 62.

millennium. Given the limitations on overland transportation during this era, it was often more practical for founders to travel to the site where new bells were to be cast or old ones repaired. This tradition added to the mystical character of bells; magicians speaking in a strange tongue would appear, work with fire; and depart, leaving (untuned) bells which resonated with a discordant effect comparable to no other musical instrument.

The brothers François and Pieter Hemony, born in Levécourt ca. 1609 and 1619 respectively, belonged to a group of these wandering bellfounders from Lorraine, a region in northeastern France. At some point in the mid 1630's, perhaps due to the Thirty Years War and its destruction in the Lorraine region, the Hemonys did not return to their homeland and continued roving through northern Germany. It was in 1641 that they went to the Netherlands, to cast a peal of three bells for the Reformed Church in Goor. There they made the valuable acquaintance of Juriaan Sprakel, maker of tower-clocks and *voorslag* mechanisms. In 1642, Sprakel was contracted by the nearby (40 km) city of Zutphen to renovate the clock in the Wijnhuistoren (Wine House Tower) and install a new *voorslag* mechanism.[3] In turn, the Hemonys were commissioned by Zutphen in 1643 to purchase bronze for bells and prepare themselves to cast a carillon. Before their definitive move to Zutphen in 1644, they returned to Germany to make bells for Düsseldorf, among other cities. A fruitful relationship with Jacob van Eyck, the Zutphen city consultant, ensued, paving the way for the success of the Hemonys as carillon builders par excellence.

Jacob van Eyck was a Dutch composer, flute player, campanologist, and carillon technician who was born blind ca. 1590. He was employed by the city of Utrecht in

---

[3]Lehr, *Van paardebel tot speelklok*, 187-188.

1624 to renovate their *voorslag*, and the following year he was retained for his services as a bell player. He was appointed carillonneur in the Janskerk (1632) and the Jacobikerk (1645), and was known for "zijn constich spelen op de clocken" ("his artistic playing on the bells").[4]

Jacob van Eyck belonged to a circle of learned men who met and corresponded, exchanging ideas. One of these was the French mathematician, philosopher and music theorist Marin Mersenne who was the first to codify the relationship of pitch to the vibrating string, demonstrating the function of partials with regard to the fundamental pitch. Van Eyck devised methods for isolating the partials of a bell, taking advantage of the principle of sympathetic vibration. Given the success that he was to have in tuning bells with the Hemonys, it is apparent that he deduced not only the fact that the overtone series of a bell differs intrinsically from that of a string[5], but also that a bell's partials are not inherently dependent on and proportional to the fundamental pitch, but can be

---

[4]Ibid., 184.

[5]The composite tones produced by all musical instruments are comprised of a series of pure tones called harmonics, or partial tones. The partials above the lowest harmonic (the fundamental) are termed overtones.

Strings and the air columns in pipes and wind instruments vibrate as a whole and also in parts, and the overtones are directly proportional (1/2, 1/3, 1/4, 1/5, etc.) to the frequency of the fundamental. The lowest harmonics of the tone C_1 are: $C_1 : C : G : c : e : g : (b^b) : c^1 : d^1 : e^1$. Parentheses indicate approximate pitches, in equal temperament.

The complex vibration pattern of carillon bells results in an unnatural series of partial tones which gives bells their characteristic timbre. A bell's partials are not directly proportional to the fundamental tone, but are dependent on the proportions of the bell's profile (diameter, height, thickness, shape). The lowest partials of a carillon bell with a strike-tone of C are: $C_1 : C : E^b : G : c : e : (f) : f : g$. This optimal result has not always been obtained by bellfounders due to faulty profiles and incompetence in tuning. The most prominent factor which distinguishes the bell from most musical instruments--putting it in a class of its own--is its minor-third partial.

The use of the term "partial" is preferable when referring to harmonics of bell tones, since they do not naturally "harmonize".

independently controlled. Although not entirely original[6], Van Eyck developed these principles sufficiently to use them in practice with the Hemonys, and had demonstrated them to his scholarly acquaintances, René Descartes among others. Van Eyck was related to the Dutch poet, diplomat, musician and scientist Constantijn Huygens (1596-1687) who was also a fellow of this intellectual circle. His son Christiaan Huygens (1629-95) was a scientist and music theorist who, in the mid 17th century, perfected the pendulum clock. Society's reliance on municipal timepieces and the bells which articulated them began its eventual decline with the appearance of mantlepiece clocks in the homes of affluent citizens.

"Niet alleen voor goed verklaert, nemaer oock anderer nabuirige speelwercien in toon ende resonantie te boven gaende."[7] (Not only approved, but surpassing other neighboring instruments in tone and resonance.) Such was the verdict in Zutphen in 1645 of Van Eyck and his colleague Lucas van Lennick, an organist/carillonneur of Deventer, after a two-week inspection of the Hemonys' first carillon. They did insist, however, that seven treble bells be added to the original set of 19, such that the instrument would range over two chromatic octaves (excepting the two lowest semi-tones, as was the custom), permitting the performance of decent music. At the final inspection a year later, Van Eyck and Van Lennick were of the opinion that it could not be improved upon. The Hemonys fabricated 13 more carillons before leaving Zutphen in 1657, the year of Van Eyck's death.

The success that François and Pieter Hemony attained in producing carillons far superior to those that any other founder had made was due to numerous factors. First of

---

[6]The 13th century French encyclopaedist Vincent de Beauvais had observed (according to Lehr, *Beiaardkunst*, p. 122) that a bell's sound comprised more than one pitch.

[7]Lehr, *Beiaardkunst*, 126.

all, they were aware that a bell's sound is composed of a set of independent partials and that the most prominent of those partials must be brought in tune with each other. They realized the importance of the proportions of a bell's measurements. Although the relationship between the diameter and height had long been established, the Hemonys were additionally aware of the necessity of having the thickness of the bell in correct proportion to the other measurements of the bell. They insisted that the profile--that is to say, all the proportions--be such that three octaves, two fifths, and a major and a minor third could be heard. They had determined the precise locations on the inner surface of the bell from which metal was to be scraped in order to tune each of the partials. Other bellfounders had chiselled away at their bells haphazardly in an attempt to improve the tone. The Hemonys used a lathe to guarantee symmetry, along with a systematic approach. In casting the bells, they also knew enough to err on the side of too thick rather than too thin, as metal could always be removed but never added. They were conscious not only of the internal tuning of the bells, but of the need for them to harmonize with each other as a series as well. The Hemonys, in collaboration with Van Eyck, devoted considerable effort toward obtaining an excellent result, as witnessed in a chronicle of 1713/14:[8]

> .....groten arbeyd, zorgvuldigheyd en onkosten besteed hadden om de ware kunst van het klok-gieten te achterhalen en om de klokken tot accord te brengen, want te voeren was de kunst van de klokken tot volmaekt accord te brengen nog niet gevonden, het was meer een geluk als wetenschap.
>
> .....had worked hard, very carefully, and had gone to great expense in order to discover the true art of bellfounding and to bring the bells in tune, since the art of perfectly tuning bells had yet to be found--it had involved more luck than skill.

---

[8]Ibid.,126.

As a musician, Jacob Van Eyck's role in this collaboration was invaluable. He was successful in attuning the Hemonys to these issues of importance. With his colleague Van Lennick, he convinced them to make the range of their instruments larger than the norm, reaching progressively toward the future of the carillon as a harmonic instrument, abandoning its original conception as a melodic instrument. Furthermore, the abovementioned chronicle goes on to say that Van Eyck "een zoo scherp gehoor had, dat hy den minsten valschen toon gewaer wierd" (had such a sharp ear that he could perceive the slightest discord).

At the end of the Thirty Years War in 1648, the United Provinces forced the closing of the Scheldt River, thereby ruining the port city of Antwerp. Commercial prosperity shifted from the South to the North, and Amsterdam was soon to be a prime location for a carillon builder. In 1657, a year after they had cast a carillon for the South Tower in Amsterdam, François Hemony moved to Amsterdam, where he spent the last ten years of his life as the city bell and artillery founder. Pieter, however, moved to the south, eventually taking up residence in Ghent. Before joining his brother in Amsterdam in 1664, he made several swinging bells and four carillons on his own, the most significant of which is the instrument in the Ghent belfry. Together they produced a few more carillons before the foundry reverted almost exclusively to the production of artillery upon the outbreak of the Second English War in 1665. Pieter continued in the foundry following the death of François in 1667.

A controversial issue--which has yet to be fully resolved--erupted in 1676 when the city of Gouda contracted Pieter Hemony to install one of his carillons in tower of the St. Janskerk. Quirinus van Blankenburg, a local organist who was hired to inspect the instrument, insisted that--in contrast with common practice--C$^{\#}$ and D$^{\#}$ bells be

included in the bass octave. Despite the cost of the bronze for these heavy bells, the Gouda city fathers sanctioned his recommendation, making this instrument the first fully chromatic carillon. Apparently, lively debate resulted, as Van Blankenburg defended his stance in a treatise entitled "de Noodsakelijkheid van Cis en Dis in de Bassen der Klokken" (the Necessity of C# and D# in the Bass of Bells). No copies of this treatise exist, but Pieter Hemony responded directly to Van Blankenburg's essay with a treatise published in Delft, in 1678, entitled:[9]

> de On-Noodsakelijkheid en Ondienstigheid van Cis en Dis in de Bassen der Klokken. Vertoont uyt verscheyde Advysen van Ervaren Organisten ende Klokken-Speelders, by een versamelt door Mr. Pieter Hemony, Klokken-gieter der Stadt Amstelredam.
>
> the Unnecessity and uselessness of C# and D# in the bass of bells. Demonstrated through various recommendations by experienced organists and bell-players, compiled by Mr. Pieter Hemony, Bellfounder of the City of Amsterdam.

The treatise is signed by Jan Scholl (organist and carillonneur of Briell), Dirck Scholl (organist and carillonneur of Delft), Salomon Verbeeck and Michiel Nuyts (Amsterdam carillonneurs). It methodically discredits each of Van Blankenburg's claims, noting their lack of rational basis, and his ignorance of the carillon and its music. It states that most instances requiring these notes can be avoided through transposition. It points out a mistake in Van Blankenburg's musical examples, where D# used harmonically would produce false intervals; given the meantone temperament,[10] the bell attached to this key

---

[9]Pieter Hemony, ed., *de On-Noodsakelijkheid en Ondienstigheid van Cis en Dis in de Bassen der Klokken. Vertoont uyt verscheyde Advysen van Ervaren Organisten ende Klokken-Speelders* (Delft: Pieter Oosterhout,1678; facsimile, Asten: NV Eijsbouts Klokkengieterij, 1964)

[10]A common temperament in the 16th and 17th centuries, the meantone system compromises the pure intervals of the Pythagorean system in order that more chromatic tones--and hence, more keys--can be employed. The continuation of the series of fifths--which are

actually sounds E^{b}, not $D^{\#}$. It observes further that, considering their function in the keys most often employed in a meantone system, the lowest $C^{\#}$ and $D^{\#}$ in the bass were rarely used. It asserts that there are no examples of these notes in the works of Italian and French [keyboard] composers, nor do they exist on all old organs and harpsichords.

Although the bells in question remain in the Gouda carillon to this day, in the final analysis this debate served to reinforce the normal practice of the day to the extent that the exclusion of $C^{\#}$ and $D^{\#}$ in the bass octave continues--despite the adoption of equal temperament--to be the standard for carillons in the Netherlands even in the 20th century.

In 1679, the carillonneur of Mechlin, Elloy Bonnejonne, convinced the city to purchase a 32-bell carillon from Pieter Hemony for the St. Rombout's Tower. This carillon had been cast in 1674, and was tuned in meantone temperament with a bourdon (largest bell) sounding $G^{\#}$ to be attached to c on the keyboard.[11] An instrument of 43 bells was assembled, incorporating some bells from the former St. Rombout's carillon along with the six swinging bells, including the great "Salvator". Salvator, the heaviest of the swinging bells, sounded $F^{\#}{}_{1}$ and was attached to $B^{b}{}_{1}$ on the keyboard, extending the customary range of the bass one diatonic step lower.

It was pure coincidence that Salvator could be assimilated into the Mechlin carillon in a functional capacity. "Born" in 1498, Salvator's significance to the people

---

slightly smaller than a perfect fifth--on which the system is based leads to a discrepancy between enharmonic tones. For keyboard instruments, the following series of fifths was chosen to take advantage of the most often used chromatic tones: E^{b}-B^{b}-F-C-G-D-A-E-B-$F^{\#}$-$C^{\#}$-$G^{\#}$. Generally, playing was still limited to keys having no more than two flats or three sharps. Carillons were tuned in meantone temperament until the 20th century.

[11] Although some carillons play at concert pitch, for a variety of reasons it is common for carillons to transpose. Towers may have limitations as to space or weight. Financial limitations may prohibit the purchase of costly heavy bells.

of Mechlin had guaranteed her a permanent place in the tower, and she has endured two breaks and recastings through the centuries. The B♭ bourdon in this carillon was to develop an indispensable role. Exploited in the music of Jef Denyn and his followers, the inclusion of this extra note became the norm in Flanders during the 20th century.

The Hemonys made no less than 50 carillons, 24 of which still can be found in the Netherlands, and six in Belgium. Their carillons were generally two- or three-octave instruments; more often the latter. In praise of the Hemonys' contribution, Joost van den Vondel wrote[12]:

Ik verhef mijn 'toon in 't zingen	I lift my voice in singing
Aen den Aemstel en het IJ,	On the Amstel and the IJ,
Op den geest van Hemony,	To the spirit of Hemony,
D'eeuwige eer van Loteringen,	Eternal honor of Lorraine,
Die 't gehoor verlekkren kon	Who could quench the ear
Op zijn klokspijs, en zijn nooten,	With the essence of his bells, and his tones,
Ons zoo kunstrijk toegegoten,	So artistically cast for us,
't Lust ons op de klokketon,	That we are inspired by their ringing,
Om doorluchte torentranssen,	In breezy tower galleries,
Eenen klokkedans te danssen.	To dance a bell-dance.

It would appear that the Hemonys took the key to their success in bellfounding with them to the grave. A few of their students continued their trade after them, but none attained a comparable level of proficiency. The work of Mammes and Claude Fremy proved to be insignificant. Claes van Noorden (1633-1716), who had been employed by François in 1662, became Amsterdam's founder along with the artillery founder Jan Albert de Grave (ca.1666-1733/34), who had married the widow of Claude Fremy. Together, Noorden and De Grave produced just a few sizable instruments. One of them remains, unplayable, in the Spasski tower of the Kremlin in Moscow. After Noorden's death, De Grave made only two significant instruments--for Potsdam and Berlin--

---

[12]Rice, *The Carillon in Literature*, 63.

which were both destroyed in World War II.

The Antwerp bellfounder Melchior de Haze (1632-97), who at one point may have learned from the Hemonys, provided some competition, winning the contract for the carillon in Brugge in 1675. His successor Willem Witlockx (died 1733) was--as were all these founders--unable to match the quality of the work of the Lorraine masters.

THE CARILLON'S MUSIC

Little is known about the music that was performed on the carillon during the 17th century. We know that it was normally the job of the carillonneur to insert the pins into the large revolving drums which played the carillon bells automatically. This *voorslag* music was changed several times a year, and the carillonneur often kept a book of music which he had marked with numbers in order to facilitate resetting the pins. This was known as a *versteekboek*, or "pinning book". Given the instrument's limitations due to its narrow compass, and given an absence of music written expressly for playing manually, it is reasonably safe to assume that the music found in *versteek* books bears a considerable similarity to the style of live performance, and may have been used for this task as well. The earliest extant example is a collection of hymns and folksongs arranged for the carillon of Brussels by city carillonneur Théodore de Sany in 1648. The collection is primarily composed of pieces, such as hymns, sequences and psalms, inspired by Catholic church melodies and organized by the liturgical calendar. The Peace of Münster was signed on 16 January 1648, recognizing the independence of the United Provinces (northern Low Countries). De Sany's collection was a reaffirmation of Catholicism, which in this area had been threatened by the progress of the Hollanders in promoting Protestantism. Profane pieces include a series of "musikaele stucken gemaeckt.....om d'orlogie te veranderen buyten alle feestdaegen"

(musical pieces made.....to vary the clock outside all holidays), a few pieces entitled "conterpuncten", and one original composition: "eene fantaisie terti toni". The arrangements themselves are rather simplistic, often consisting of a statement of the tune followed by one or more uncomplicated variations.

The other extant pinning book is the collection made by Phillip Wyckaert during the period from 1661 to 1693, entitled *Den Boeck van den Voorslach van Ghendt Toebehoorrende myn Edele Heeren Schepenen vander Keure* (The Book of the *Voorslag* of Ghent belonging to my Noble Aldermen of the Electorate). It consists of 112 pieces in various styles. Dance pieces include allemandes, courantes, gavottes, pavanes, galliardes and rigaudons. There are opera excerpts and song variations as well as religious music.

In 1644, Jacob van Eyck published:[13]

Der Fluyten Lust-hof, Vol Psalmen, Paduanen, Allemanden, Couranten, Balletten, Airs, &c. Konstigh en lieflyck gefigureert, met veel veranderingen. Door den Ed. Jr. Jacob van Eyk, Musicyn en Directeur vande Klok-wercken tot Uitrecht, &c. . . . Dienstigh voor alle Konst-lievers tot de Fluit, Blaes- en allerley Speel-tuigh.	The Flute's Pleasure Garden, Full of Psalms, Pavannes, Allemandes, Courantes, Ballets, Airs, etc. Artistically and delightfully arranged, with many changes. By the Noble Lord Jacob van Eyk, Musician and Director of the Clockworks in Utrecht, etc. . . . Of use to all art lovers for the flute, woodwinds and all types of musical instruments.

He dedicated the collection to Constantijn Huygens, imploring him to "accept the book, for the love of the art, in order to preserve string and carillon, flute and organ for the

---

[13]Jacob van Eyck, *Der Fluyten Lust-hof*, ed. Winfried Michel and Hermien Teske (Winterthur: Amadeus Verlag (Bernhard Päuler), 1984), 3.

listeners".[14] Therefore, it is safe to assume that he played these pieces on his carillons. The collection includes Caccini's famous aria *Amarilli mia Bella*, and John Dowland's *Pavaen Lachrymae*. In addition to the types of pieces mentioned in the title, there are hymns such as *Vater unser im Himmelreich*, folk tunes such as the English "Simple Simon" (*Malle Symen*), and a few pieces of strictly instrumental nature (non-vocal) such as *Fantasia & Echo*. The melodies are presented in a fairly straightforward manner and followed by as many as three or four variations which are generally characterized by added passing tones, and movement from quarter notes to eights and sixteenths. The range does not exceed an octave and a sixth.

The Golden Age of carillon building saw the art grow with leaps and bounds. Standards were set which would challange bellfounders for the next two centuries. Flemish and Dutch traditions concerning the bass compass of the instrument were established. The first notated music for the carillon confirms its evolution from a mere *voorslag* to a harmonic musical instrument of significance. Witness Van den Vondel:[15]

Gijsbrechts stadt wort rontom heen, Op musijk van torenklokken, Met een'steenen muur omtrokken, Wort geklonken hecht aen een, Als Verbeek met voet en vingren Klanken weet door een te slingren.	Gijsbrecht's city becomes round about, Surrounded, with a wall of stone, Attached to the sounds, To the music of tower bells, When [Salomon] Verbeek with feet and fingers Hurls sounds to and fro.
Hij verdooft met klokgeluit D"allereêlste kerkkooraelen, Speelt met klokken, als cymbaelèn, 's Hemels kooren kijken uit.	With the peal of his bells He drowns out the noblest church chorales Playing bells, like cymbals, Heaven's choirs observe.

---

[14]Ibid., 3.

[15]Rice, *The Carillon in Literature*, 61.

III. THE 18TH AND 19TH CENTURIES

POLITICO-CULTURAL INTRODUCTION

The rationalism of the Baroque broadened during the 18th century into the philosophical movement known as the Enlightenment, to which the Dutch Republic had become receptive at an early stage. It was not without a certain spirit of empiricism, which was not healthy for the continuation and development of the art of bellfounding. With the signing of the Treaty of Utrecht in 1713, the southern Low Countries were placed under the sovereignty of the Emperor Charles VI of Austria. Although generally a Dutch language region, the nobility and upper-middle classes in these Austrian Netherlands adopted French, considering it a more cultured language. This group was receptive to the Enlightenment as well. Artistically, the Low Countries experienced, during the 18th century, a continuation and imitation of styles from the previous century as well as an increasing influence of foreign models and ideas. Painting, architecture, literature, and the plastic arts--including sculpture, ceramics (such as Delft), and bellfounding--all suffered a decline, eventually reaching a low at some point during the 18th or 19th century.

CARILLON BUILDING

Joris du Mery (1715-87) of Antwerp and later of Bruges cast a handful of carillons for Flemish cities, the most significant being for the Halletoren in Bruges where 26 of the original 45 bells remain. His contemporary Andreas Jozef van den

Gheyn (1727-93) enjoyed more successful renown, making 23 carillons which rivaled the quality that the Hemonys had attained. Members of the Van den Gheyn family had had their hands in the founding industry since the 15th century, when they were among the numerous tradesmen to whom Mechelen owed its reputation as a center for the manufacture of cannons. It was Andreas Frans van den Gheyn (1696-1730) who moved to Louvain to make the 23-bell, two-octave carillon for St. Pieter's, for which he had received a contract in 1725.[1] Unfortunately it was not well received, and despite his efforts to improve the seven objectionable bells, the carillon garnered the reputation of "*un instrument médiocre*". His son Andreas Jozef eventually took over the foundry, ultimately becoming the bellfounder to the court at Brussels. Not strictly a founder, Andreas Jozef was a musician as well, playing both carillon and organ.

A comparison of his œuvre with that of the Hemonys, while revealing a few differences in character, demonstrates one important advance in the art of fabricating carillon bells. Indeed, Van den Gheyn's carillons were generally lighter, and hence higher pitched, than Hemonys'. Furthermore, Van den Gheyn displays less precision and consistency in the tuning and the uniformity of the series of bells. The consequential breakthrough, though, is manifest in the admirable success that Andreas Jozef had in making brilliant treble bells. Whereas the Hemonys eventually made bells as high as c#^{2}, but with a notable compromise in quality, Van den Gheyn went as high as d#^{3} with pleasing results. The key to their success lies in Van den Gheyn's deviation from the principle in bellfounding which André Lehr has dubbed *het principe van de dynamische*

---

[1]Xavier Van Elewyck, *Matthias van den Gheyn, le plus grand Organiste et Carillonneur belge du XVIIIe siècle, et les célèbres fondeurs de cloches de ce nom depuis 1450 jusqu'à nos jours* (Paris: Librairie de P. Lethielleux, 1862), 13.

gelijkvormigheid (the principle of the dynamic form similarity).[2] This principle is used in the design of swinging bells and had hitherto been applied to the design of carillon bells. It refers to the fact that the increase of all the measurements of a bell--diameter, height, thickness, etc.--by a given factor results in the decrease in the frequencies of the partials by the inverse proportion.[3] Strict adherence to this principle causes treble carillon bells to be so small that they are poor in timbre and barely audible from the ground. Van den Gheyn obviously realized that the trebles must be heavier to give them more ringing mass. He demonstrated in practice that this could be achieved, without altering the pitch, by deviating from the principle of *dynamische gelijkvormigheid* and compensating for the added weight by making the bells thicker.

MUSIC FOR THE CARILLON

Several volumes of music have survived to document the 18th-century carillon playing traditions. *Beÿaert 1728* is the earliest extant collection of music arranged specifically for manual performance on a carillon.[4] It consists of 49 songs, often very short, for the season from Christmas through Epiphany, many of which are extracted from Joanne Berckelaers' 1679 collection *Cantiones Natalitiæ*. The manuscript is preserved in the Antwerp City Archive and was most likely written by Theodorus Everaerts who was the city carillonneur from 1720 until his death in 1739. The music covers a three-octave range, from C to c^2, and was playable on the city carillon in the

---

[2]André Lehr, *Leerboek der campanologie* (Asten: Nationaal Beiaardmuseum, 1976), 99.

[3]In other words, if the measurements are increased by a factor of 2, the frequency of the partials will be decreased by 1/2.

[4]Vlaams Centrum voor Oude Muziek, *Aspecten van de 18de-eeuwse beiaardkunst in de Nederlanden*, (Peer: VZW Musica, 1985).

Antwerp Cathedral. It is especially interesting to note that the pedal part covers a range of one and a half octaves, from C to g^1. The texture of the music is two parts or more, usually just a cantus firmus and a bass line. It is not ornamented, and is set in the keys of C major, F major, G major, A minor, and D minor. Three have *versteek* marks, and one includes a sixteenth-note variation, retaining the original bass.

A much more significant collection belonged to Everaert's successor, the organist, carillonneur, and violinist Joannes de Gruytters (1709-72). The manuscript of his carillon book is preserved in the library of the Flemish Music Conservatory in Antwerp. The title page reads:

> *ANDANTEN, marchen, gavotte, Ariaen, giuen, Corenten, Contre-dansen, Allegros, preludies, menuetten, trion, &.&. Voor.Den.Beÿaert.ofte.klok-spil. Bÿ een vergaedert ende opgestelt. Door mÿ Joannes, de, Gruÿtters, beÿart ofte klok-spilder der stadt ende Chatedrale tot, Antwerpen 1746*
>
> ANDANTES, marches, gavottes, arias, gigues, correntes, contradanses, allegros, preludes, minuets, trios, etc., etc., for the carillon or the chime, collected and arranged by me, Joannes de Gruytters, carillon or chime-player of the city and the Cathedral in Antwerp, 1746

The majority of the 194 pieces are arrangements of existing works of a secular nature, and nearly half are minuets. Composers represented include Baustetter, Colfs, Corelli, Couperin, De Croes, De Fesch, Fiocco, Handel, Lully, Raÿck, Schepers, Vivaldi, and De Gruytters. Although he himself autographed only five of the pieces, the composers of more than two-thirds of the contents of the book are not acknowledged. In keeping with the practice of the day, two-voiced textures predominate, with occasional harmonic notes. In contrast to the pieces in *Beÿaert 1728* which tended to have similar rhythmic movement in both parts, De Gruytters uses a basso continuo--which does move

continually in order to avoid the loss of a foundation due to decaying bell tones--and a more florid treble filled with ornamentation. These remarkably more substantial arrangements not only reflect more accurately the musical style of the period, but are evidence of a relatively versatile playing mechanism as well. The pieces do not exceed the three octave range (c to d^3/37 bells) of the city carillon, and the pedal parts only extend from C to e^1. There was, incidentally, another carillon in the tower of the Antwerp Cathedral: the "church" carillon, which had 32 bells at that time.[5] Despite the indication on the title page that the pieces were intended for the automatic mechanism as well, there are no *versteek* markings in the score. However, De Gruytters had apparently developed a good method for setting the drums, as there is a manuscript entitled *Reglement ofte maniere om alle trommels diende tot beyaert spelen te ver(steken)*, which is "in the unmistakable hand of Joannes De Gruytters".[6]

The *Leuvens beiaardhandschrift*, or Louvain Carillon Manuscript,[7] dating from 1755-60 was found in 1989 in a collection from the estate of Knight Xavier van Elewyck (1825-88).[8] For the most part it is in the hand of J.F. Le Tiège, an amateur musician from Louvain, and all indications seem to show that it was used for performance on the Louvain carillons, particularly on the Andreas Frans van den Gheyn

---

[5]Jef Rottiers, *Beiaarden in België* (Mechelen: Beiaardschool, 1952), 128-132.

[6]Margo Halsted, "Beÿaert 1728; A Historical and Bibliographical Approach," in *Jaarboek van het Vlaams Centrum voor Oude Muziek* (Peer: VZW Musica, 1985), 19.

[7]There are actually two untitled manuscripts: P195-30 contains 151 carillon pieces; P195-31 consists of a harpsichord book and a carillon book, with only five carillon pieces that do not appear in P195-30 as well. The 156 carillon pieces will henceforth be referred to as the Louvain Carillon Manuscript.

[8]Knight Xavier van Elewyck was a lawyer and musicologist who is credited with the rediscovery of Matthias van den Gheyn, having copied his carillon works and written a monograph on him in 1862, as well as publishing the *Collection d'œuvres composées par d'anciens et de célèbres clavecinistes flamands* in 1877.

carillon in the St. Pieter's Church.[9] It is comparable in many ways with the De Gruytters carillon book, and several pieces can be found in both collections. Composers represented include Baustetter, Colfs, Constantinij, Couperin, J.H. Fiocco, (M.?)Van den Gheyn, W.G. Kennis, Loeillet, and Raick; composers of only 13 of the pieces have been identified as yet. Two-thirds of the 156 pieces are dances, including marches, gigues, gavottes, and over 70 minuets. There are eleven Christmas songs taken from the 17th-century Antwerp collection *Cantiones Natalitiae*, eight of which can also be found in *Beÿaert 1728*. Seven longer works include transcriptions of harpsichord works such as François Couperin's *Les Bergeries*, and variations on popular tunes of the period such as *Les Folies d'Espagne* and *Ik zag Cecilia komen*. It is conceivable that a number of these pieces were written by Matthias van den Gheyn, as both *Les Folies d'Espagne* and *La Bergerie* [sic] were required pieces on the 1745 competition for the post of Louvain City Carillonneur which he won.[10] There are also 26 pieces for special occasions, such as festive processions and various guild celebrations. The majority of the pieces are two-voiced, some having three or four voices, and added voices are common in cadences. The pedal part occasionally has two voices. Much ornamentation appears, although not as profusely as in the De Gruytters book.

The carillon repertory of André Jean Baptiste Bonaventure Dupont is preserved

---

[9]A card with the text "N° 274, Chansons & Ballets des Sociétés de Rhétorique Flamande, joués sur les Carillons de Louvain du XVIème au XIXème Siècle" was found with the manuscript. On the envelope was written, in Elewyck's hand: "airs populaires pour carillon rassemblés par le chevalier van Elewyck pour le comte de Flandre." Gilbert Huybens and Luc Rombouts, eds. *Het Liedeken van de Lovenaers; Een 18de-eeuws Leuvens beiaardhandschrift* (Louvain: Universitaire Pers Leuven, 1990), V-IX.

[10]Xavier van Elewyck, *Matthias van den Gheyn, le plus grand Organiste et Carillonneur belge du XVIIIe siècle, et les célèbres fondeurs de cloches de ce nom depuis 1450 jusqu'à nos jours* (Paris: Librairie de P. Lethielleux, 1862), 30-32.

in the archives of the city of Saint-Omer in French Flanders.[11] On the title page, which reads:

> Ce Livre de Musique appartient a [sic] André Jean Bapt. Bonavent. Dupont.
> 1780 organiste carillonneur de l'abbaÿe de St. bertin^{en}. 1785

one notes that the word "*organiste*" is written on a strip of paper and attached to the page. Also, the second of the two dates was altered from 1780 to 1785. Perhaps he was appointed organist in 1785. Little is known about the carillon built by Florent de le Court for the Abbey of St. Bertinus, as it was destroyed at the end of the 18th century. His music would require 35 bells in three octaves, from C to c^2. It contains pieces for organ and harpsichord, chant melodies, liturgical motets with Latin text, and 376 pieces, generally very short, for carillon. In contrast to the other carillon collections from this period, the Dupont repertory includes numerous transcriptions of vocal pieces, such as fashionable French operatic arias. Composers are rarely indicated; those represented include Couperin, Duni, Grétry, Martine, Monsigny, Veras, and Dupont himself. Minuets are plentiful, as are transcriptions of French harpsichord pieces such as Couperin's *Réveil-matin*, *Les Vendangeuses*, and *Les bergeries*. Following the custom, many are grouped in *ordres*. The pieces tend to have a weak harmonic style, and usually are notated with only a melody accompanied by occasional harmony notes. Solfège syllables sometimes indicate bass notes and harmony. Some pieces begin with manual and pedal parts, reverting suddenly to the abbreviated format. The pieces were clearly collected for Dupont's own performance, as a basis for improvisation.

---

[11]As the Dupont repertory is not generally available in a published score, factual information here is taken from the following two sources:

Ronald Barnes, "The Carillon Repertory of André Jean Baptiste Bonaventure Dupont, Saint-Omer, France, 1780; a preliminary survey," *Bulletin of the Guild of Carillonneurs in North America*, Vol. XI, No. 2 (Dec. 1958): 19-38.

Prosper Verheyden, *Beiaarden in Frankrijk* (Antwerp: De Sikkel, 1926), 46, 128-131, 198.

Two other 18th-century *versteek* collections have recently come to light and are in the process of being made available. It should be noted that the technology of automatic carillon playing mechanisms had advanced considerably by the 18th century, as can be seen in this excerpt from *Louvain monumental* by M. Edward Van Even:[12]

> en date du 22 Février 1730, Van den Gheyn s'engagea à fournir.....un nouveau tambour en cuivre pour le carillon. Il devait contenir 6576 trous à poser les notes, à l'effet de pouvoir jouer 224 mesures de 6 à 8 notes dans la mesure.
>
> On 22 February 1730, Van den Gheyn contracted to supply.....a new copper drum for the carillon. It must have 6576 holes for setting the notes, such that 224 measures can be played with 6 to 8 notes per measure.

The music arranged in 1784 by the organist Johann Ephraim Eggert for the bells in Danzig are based on Lutheran hymn tunes and are organized according to the liturgical year. Five hundred pages of *versteek* music were found in the *Hessische Staatsarchiv* in Darmstadt. The books were compiled by Georg Gottfried Aßmus, Conrad Friedrich Strauss, Philip Strauss and Friedrich Strauss between 1744 and 1855 for the 28-bell Hemony carillon in Darmstadt which was playable both manually and automatically.

The carillon repertory of Johan and Frederik Berghuys of Delft remains in 14 notebooks[13] in that city's archives. Johan was city carillonneur from 1741-1801, and his son Frederik succeeded him, playing through 1835. The music consists of melodies with letters beneath the staff indicating pedal notes or harmony.

---

[12]Van Elewyck, 14.

[13]Margo Halsted says at least 11 notebooks. Arie Abbenes and André Lehr mention 20. Jacques Maassen says 14 of the 44 music books from the estate include carillon music, amounting to approximately 1400 arrangements of compositions by more than 100 composers. Jacques Maassen, "Music and playing; Dutch carillon composers, compositions and editions," in *Forty-five Years of Dutch Carillons 1945-1990* (Asten: Netherlands Carillon Society, 1992), 91.

MATTHIAS VAN DEN GHEYN

The most significant 18th-century contributions to the carillon repertory are the eleven preludes composed specifically for the carillon by Matthias van den Gheyn (1721-85). An older brother of the gifted bellfounder, the musically talented Matthias was appointed organist of the collegial church of St. Peter at age 20. He won a competition for the post of carillonneur there in 1745, and the jury proclaimed: "*dat hy verre exceleêrde boven d'andere*" (that he excelled far beyond the others).[14] All five competitors were required to play the same program, consisting of *Folie d'Hispanie*, *La Bergerie*, *Capprice*, and an *Andante*.[15] It is interesting to note the stipulations of his contract. He was to play on all market days, for all masses, and for public and triumphal processions. He was to change the music on the automatic mechanism as often as the City Council deemed necessary. He was prohibited, without express permission, to engage a substitute to play for him. At his own expense, he was to retune, or recast if necessary, the discordant bells in the carillon that his father had made. (This stipulation was dropped upon Matthias' appeal.) Furthermore, he was to pay honorariums to the jurors, and donate money during his first year toward the purchase of baldachins.[16] In 1862, 51 compositions by Matthias van den Gheyn were assembled by Knight Xavier van Elewyck and presented to the director of the Brussels music conservatory François Fétis. In addition to pieces for organ, harpsichord, violin and keyboard, and treatises on harmony and the fundamentals of continuo, Van Elewyck's collection included eleven

---

[14]Van Elewyck, 33.

[15]Ibid., 32.

[16]Ibid., 68-69. (A baldachin is a canopy, carried in church processions or placed over an altar.)

preludes and a few less significant pieces for carillon.[17] Nicolas Lemmens, having examined and played 45 of the pieces in Elewyck's collection proclaimed: "qu'il ne croyait pas qu'à part Bach et Handel, le XVIIIme siècle eût possédé un plus grand génie que Matthias Van den Gheyn!" (that he didn't believe that, excepting Bach and Handel, the 18th century had had a greater genius than Matthias van den Gheyn).[18]

The carillon preludes, in contrast to his works for organ and harpsichord, display a simplistic--yet effective--approach to harmony and form. They represent a milestone in the carillon repertory. Until this time, music composed for the carillon merely mimicked the style of keyboard music, which was the customary source of the transcriptions that had been the staple of the carillon repertory. Van den Gheyn was the first to use the tonal properties of the carillon to their best advantage, incorporating elements of the current musical style. Their slow harmonic rhythm suits the generally resonant character of bells well, thereby avoiding chaotic confusion. The figurations of broken chords compensate for the weaknesses--dynamic, resonant, timbral, etc.--of the treble bells produced in that era. In refraining from the use of block chords, harshness is avoided and the clarity of any counterpoint is readily apparent. Strong, driving rhythmic patterns, an integral facet of baroque music, are both a fundamental aspect of his style and an essential factor in making carillon music intelligible. Van den Gheyn exploited the bells' minor-third partial with the frequent use of diminished

---

[17]Ronald Barnes purports that an *Andante* in D, a *Fuga* in G, and a *Rondo* in G are the only pieces in this collection, with the exception of the preludes, that are original carillon compositions. The monograph, however, lists the following carillon pieces: *Fugue en la majeur pour carillon*; *Fugue en sol, pour carillon*; *Un allegro ou fuguette en sol majeur pour carillon*; *Dix préludes, suivis de quelques petits airs, menuets, marches, etc. pour carillon*; *Rondo en sol pour carillon*; *Marche en ré majeur pour carillon.* Ronald Barnes, *Matthias van den Gheyn and his Preludes for Carillon* (Master's thesis, Stanford University, 1961), 63-63, 117.

[18]Van Elewyck, 56.

seventh chords. Unfortunately, the only extant manuscripts of his carillon works are in the hasty hand of a copyist hired by Van Elewyck, and are laden with errors and inconsistent notational abbreviations. Until recently, the discrepancy between the range required for performing Van den Gheyn's preludes and the supposed range of his carillon in the Louvain *Sint Pieterskerk* has been a puzzle. The confusion has been based on Van Elewyck's indication that Andreas Frans van den Gheyn delivered a 23-bell carillon in 1628.[19] Recent research shows otherwise:[20]

> Bepaalde documenten vermelden immers dat de beiaard die Andreas Frans Vanden Gheyn in 1726-28 goot voor het Leuvense stadsbestuur uit 40 klokken bestond en als omvang had c-d-e-chromatisch-f3.
>
> Certain documents do state that the carillon that Andreas Frans van den Gheyn cast in 1726-28 for the Louvain City Council consisted of 40 bells with the compass C, D, E, chromatic through f2.

With only one exception,[21] the preludes never exceed this range.

Of all the 18th-century bell music, only the preludes of Matthias van den Gheyn and a selected number of pieces from the De Gruytters carillon book have gained a permanent place in the modern carillon repertory; it is only due to the recentness of their discovery that portions of the Louvain manuscript have not yet achieved this distinction. This phenomenon is the result of the combination of two factors: this music represents the highest quality of all the 18th-century carillon repertory as well as the most idiomatic, effective approach to carillon playing.

---

[19]Ibid., 13.

[20]Luc Rombouts and Gilbert Huybens, foreward to *Het Liedeken van de Lovenaers; Een 18de-eeuws Leuvens beiaardhandschrift* (Louvain: Universitaire Pers Leuven, 1990), ix.

[21]Prelude No. 10, measure 58.

BURNEY'S IMPRESSIONS

Although the accounts of the English musician, composer, and historian Dr. Charles Burney are wrought with inaccuracies as to details, they do paint a colorful portrait of the state of the art in the 1770's. His discovery of the carillon obviously made a remarkable impression, which he relates in his inimitable style:

> .....when I came to Ghent, I determined to inform myself, in a particular manner, concerning the *carillon* science.....The *Carilloneur* [sic] was literally *at work*, and *hard* work indeed it must be; he was in his shirt with the collar unbottoned [sic], and in a violent sweat.....The player has a thick leather covering for the little finger of each hand, otherwise it would be impossible for him to support the pain which the violence of the stroke necessary to be given to each key, in order to its being distinctly heard throughout a very large town, requires.[22]

In Amsterdam, Burney encountered Jacob Potholt, whose original compositions for carillon have disappeared:

> M. Pothoff [sic] was organist of the Wester Kerk twenty-two years before he obtained this place. ...When he was a candidate for the organ, at the *Wester Kerk*, he obtained a victory over twenty-two competitors, who all played against him.
>
> At noon I attended M. Pothoff to the tower of the *Stad-huys*, or town-house, of which he is *carilloneur*; it is a drudgery unworthy of such a genius.....He had very much astonished me on the organ, after all that I had heard in the rest of Europe; but in playing those bells, his amazing dexterity raised my wonder much higher; for he executed with his two hands passages that would be very difficult to play with the ten fingers; shakes, beats, swift divisions, triplets, and even *arpeggios* he has contrived to vanquish.
>
> He next played variations upon the Psalm tune, with great fancy, and even taste: when he had performed this task, he was so obliging as to play a quarter of an hour extempore, in such a manner as he thought would be more agreeable to me than psalmody; and in this he succeeded so well, that I sometimes forgot both the difficulty and defects of the instrument.....I never heard a greater variety of passages, in so short a time; he produced effects by the *pianos* and *fortes*, and the *crescendo* in

---

[22]Charles Burney, *The Present State of Music in Germany, the Netherlands and United Provinces. or, The Journal of a Tour through those Countries, undertaken to collect Materials for A General History of Music.* (London, 1775; facsimile, New York: Broude Brothers, 1969), 1: 13-15.

the shake, both as to loudness and velocity, which I did not think possible upon an instrument that seemed to require little other merit, than force in the performer.

But surely this was a barbarous invention, and there is barbarity in the continuance of it; if M. Pothoff had been put into Dr. Dominicetti's hottest human cauldron for an hour, he could not have perspired more violently than he did after a quarter of an hour of this furious exercise; he stripped to his shirt, put on his night-cap, and trussed up his sleeves for this *execution*; and he said he was forced to go to bed the instant it is over, in order to prevent his catching cold, as well as to recover himself; he being usually so much exhausted, as to be utterly unable to speak.

By the little attention that is paid to this performer, extraordinary as he is, it should seem as if some hewer of wood, and drawer of water, whose coarse constitution, and gross habit of body, required frequent sudorifics, would do the business, equally to the satisfaction of such unskilful [sic] and unfeeling hearers.[23]

THE FRENCH REVOLUTION

The far reaching consequences of the French Revolution in 1789 had varying effects on the northern and southern Low Countries. The Austrian Netherlands were conquered and occupied by the French in 1794, annexed the following year, and suffered considerably greater losses than the North with regard to bells. The United Provinces were not annexed until 1810, and with Napoleon's defeat in Waterloo in 1815, the southern and northern Low Countries were amalgamated into the independent Kingdom of the United Netherlands under William I of Orange. Soon, Belgium won her own independence in the revolution of 1830, incited by a performance of Auber's opera *La Muette de Portici* in Brussels.

In the second year of the French Republic, the Committee for Public Safety published instructions for obtaining copper from bell metal:[24]

---

[23]Ibid., 2: 288, 292, 294-97.

[24]*Instructions sur l'Art de séparer le cuivre du métal des cloches; publiée par ordre du Comité de Salut Public. De l'Imprimerie du Comité de Salut Public. L'an 2me de la République française.* Verheyden, 32.

Toutes les sciences, tous les arts, toutes les connoissances [sic] humaines, poussés par les Français au plus haut degré de perfection, doivent concourir en ce moment à la destruction des ennemis qui, par une guerre impie, s'opposent au succès de notre glorieuse révolution.....On craint que le cuivre manque, ou au moins ne soit pas en suffisante quantité pour le besoin des arsenaux.....Les cloches dont la superstition avoit surchargé les églises, nous offrent une ressource féconde, une sorte de mine assez abondante pour suffire à nos besoins.....En augmentant sans cesse le nombre des cloches, on enlevoit ainsi aux arts une quantité immense de cuivre, on lui ôtoit toutes ses propriétés u[t]iles, pour lui donner la seule qualité du son, et on l'accumuloit dans les clochers, en privant les ateliers d'un de leurs matériaux les plus utiles. Mais la superstition a en quelque sorte, travaillé pour la liberté; c'est un riche dépôt que celle-ci doit lui arracher, et qui doit lui fournir des armes contre le fanatisme des rois et des prêtres.

All the sciences, all the arts, and all human knowledge, cultivated by the French to the highest degree of perfection, must now unite in the strengthening of freedom and equality, in the establishment of the singular and indivisible Republic, in the destruction of enemies who, through a blasphemous war, are opposed to the success of our glorious revolution.....A shortage of copper is feared, or at least, there is concern that a sufficient quantity does not exist for the demands of the arsenals.....Bells, whose superstition has overcharged the church, offer us a fertile resource, a sort of mine abundant enough to suffice for our needs.....In constantly increasing the number of bells, the arts would have made off with an immense quantity of copper, taking all its useful properties away, in order to give it the sole capacity of making sound, accumulating it in belfries, depriving workshops of one of their most useful materials. But superstition has, in some way, worked for freedom; freedom must extract a valuable treasure from it, and use it to supply arms against the fanaticism of kings and priests.

Kamiel Lefévere states that archives and historical documents show that Belgium possessed as many as 110 carillons at one time, and that approximately 50 have disappeared as a result of war, revolution, fire and destruction.[25] The majority of these were melted in order

---

[25]Kamiel Lefévere, *Bells over Belgium* (New York: Belgian Government Information Center, 1949), 11.

to make cannons during the French revolutionary period. The carillons of Louvain (St. Peter's), Dinant, Ypres, Diksmuide, Nieuwpoort, Antwerp (St. Michael's), Averbode, and Ename, among others, fell prey to the French bell plunder. Some of the pilfered carillons escaped destruction and were eventually returned to their original, or a different, tower. Folklore has it that the bells of Hasselt were stolen by inhabitants of the city and buried for safekeeping.

Considering the public nature of the instrument, it was inevitable that the carillon should become politicized at some point in its history. Thanks to the astute actions of Gerardus Gommarus Haverals (1762-1841) who had been appointed city carillonneur in 1788, the famous Mechelen carillon was spared the unfortunate fate of many during the revolution. Not pleased with the French Republicans' attempt to remove his bells, Haverals diplomatically convinced them that the bells would be of the most service to the French Republic if they were to remain in the tower so that their victories could be heralded by renditions of *La Marseillaise* and *La Carmagnole*, etc. Furthermore, he convinced them that these songs would arouse the enthusiasm of the people of Mechelen. Last but not least, he persuaded them to salvage a G# bell that they had already requisitioned from the St. Janskerk to fill in a gap in his carillon.[26] His performances of Republican songs, however, brought him a firm reprimand from the city council, but the bells are still in the tower.

THE 19TH CENTURY

The 19th century was a period of decadence for the carillon art. With the death of Andreas Jozef van den Gheyn in 1793, a glorious 150 years of carillon building came to a close. Another century would pass before a founder was to succeed in casting and tuning acceptable

---

[26]Frans Vermoortel, *Mechelen, Sint-Romboutstoren en zijn beiaarden* (Brugge: Marc Van de Wiele, 1987), 105.

carillon bells. Musically speaking, with the advent of Romanticism there was a movement away from the very precepts which had served to make bell music intelligible: steady rhythmic patterns, well-defined forms, diatonic harmonies, constant tempi, and simple, clear textures. Furthermore, the meantone temperament of the instruments was not well-suited for the chromaticism which was characteristic of the Romantic period.

Little music remains to account for the 19th-century norms of carillon repertory. The most significant contribution is the 1841 collection of twelve *Préludes Mélodiques* by Joannes Franciscus Volckerick (1815-1897) who was carillonneur of Antwerp from 1834 to 1864. Written in an improvisational character, cadenzas and changes of texture, tempo and meter fill the preludes. Volckerick calls for the full dynamic range from pp to ff. He has taken the meantone tuning into account, both in his choice of keys (G, C, F, B♭, A minor and G minor) and his deviation from them, with some exceptions. Volckerick's manuscripts are in the Flemish Cultural Museum and Archive in Antwerp, and include numerous transcriptions of opera arias. It is notable that opera music transcriptions were standard fare for church organists in the mid-19th century as well, and that organ music composition experienced a similar plunge into decadence. This attempt to adapt the then current musical traditions to performance on the carillon did not result in an enduring œuvre; Volckerick's music is rarely performed today.

Experiments were undertaken to make the carillon playable from a piano-type keyboard by the Parisian clockmaker Armand François Collin, the French bellfounders Ernest and Amédé Bollée, and the Maastricht pianobuilder Frederik Smulders. Some employed pneumatics, and the latter's device, using flywheels, was implemented in several cities, including Maastricht, Mechelen and Antwerp. None of these devices were successful.

LITERARY OVATIONS

Although the development of the carillon did not take great strides in the 19th century

from a practical standpoint, the instrument's aura did leave its mark in the literature of the Romantic era. Around the turn of the century (1800), Friedrich Schiller glorified the process of bellfounding in his poem *Das Lied von der Glocke*. In *The Oise in Flood*, Robert Louis Stevenson commented: "There was something very sweet and taking in the air he played and we thought we had never heard bells speak so intelligently or sing so melodiously as these."[27] Henry Wadsworth Longfellow was quite taken by the carillons of Ghent and Bruges; this is evident in his diary of 1842 and his poem *The Belfry of Bruges*.[28] Legend has it that in 1837, Victor Hugo etched a poem in the window of his hotel room in Mechlin with a diamond ring: "J'aime le carillon dans tes cités antiques....."[29]

Knight Xavier van Elewyck, in describing Belgium as the land of bells and carillons, wrote[30],

> Toutes nos villes, NULLE EXCEPTEE, possèdent des sonneries musicales et souvent plusieurs, l'une dans le beffroi, les autres dans les tours des églises. La plupart de ces instruments sont à deux et à trois octaves et nous connaissons de simples villages des Flandres et de la Campine sont les carillons, comme valeur artistique, sont supérieurs aux orgues des paroisses.
>
> All of our cities, WITH NO EXCEPTIONS, possess musical sets of bells and often several, one in the belfry, the others in the church towers. Most of these are two and three octave instruments and we know of simple villages in Flanders and in the country in which the carillons, as far as artistic value is concerned, are superior to the parish organs.

---

[27]Rice, *Literature*, 27.

[28]Ibid., 28-29.

[29]Victor Hugo, "Ecrit sur la vitre d'une fenêtre flamande," from "Les rayons et les ombres" XVIII, in *Livres poétiques complètes*, comp. Francis Bouvet (Paris: Jean-Jacques Pauvert, 1961), 250.

[30]Van Elewyck, 17.

IV. JEF DENYN: CATALYST FOR A NEW CARILLON TRADITION

INTRODUCTION

Jef Denyn (1862-1941) was the major catalyst for the 20th-century renaissance of the carillon art. He was the son of Adolf Denyn, who had been carillonneur of the city of Mechlin since 1851. When an eye disease prevented Adolf from performing his carillonneur duties on Easter of 1881, a student substituted for him in Brussels--where he was also city carillonneur--and he sent his son Jef into the tower of St. Rombout's. Although Jef had had no formal music training and only knew three pieces for his Easter debut, his father's instruction from this point forward put Jef in good stead to assume the official appointment in Mechlin on the first of January, 1887 after Adolf had gone totally blind.[1]

Monumental advances in several aspects of the carillon art were made as a result of Jef Denyn's dynamism. He readdressed the design of the instrument from a functional perspective, making numerous revisions and outlining the properties of effective carillon construction. His institution of a concert series not only changed the status of the instrument but eventually led to the spread of the carillon art to America as well. From the inception of the first school devoted to the education of carillonneurs, Jef Denyn--as its director--set a precedence for the continual elevation of carillon performance standards. Finally, his distinctive style of playing and composition

---

[1]Koen Cosaert, *Jef Denijn; grondlegger van een nieuwe beiaardkunst* (Mechelen: 1987), 6,8,9,10.

attracted much attention and inspired a revival of bell music in the Low Countries.

TECHNICAL ADVANCES

It was most likely due to his father's disability that Jef Denyn not only took up carillon playing but also gave up his plans to study engineering in favor of helping to run the family business. His aptitude for engineering, however, enabled him to design a more efficient and responsive mechanical action in the carillon.

Adolf Denyn himself had been involved in the installation and restoration of carillons,[2] but it was Jef whose work in this area earned great renown. One of his first projects was the installation of a carillon in Aberdeen, Scotland in 1891, the bells of which had been cast six years earlier by the Louvain founder Severinus van Aerschodt (1819-1885).[3] The renovation of his carillon in the tower of St. Rombout's in Mechlin followed in 1892, and it was the success that he achieved in this venture which paved the way for a virtual revolution in the carillon world. Denyn's innovations were incorporated into the St. Rombout's instrument and resulted in an ideal prototype upon which countless renovations were based. These improvements afforded much more control in playing, enabling one to play with more precision and expression as well as making it possible to play music of greater technical difficulty.

Denyn observed that carillon keyboards "geenzins erop berekend om aan het spel vastheid te verleenen en het den beiaardier gemakkelijk te maken" (had by no means been fabricated from the standpoint of making the carillonneur secure and comfortable

---

[2]Prosper Verheyden, "De Beiaard," in *Gedenkboek Jef Denyn, "Stadsbeiaardier en Meester van den Toren"* (Mechelen: Beiaardschool, 1947), 240.

[3]Cosaert, 12.

in performance).[4] He faulted all the component parts: the pedals and keys were too long, too close to each other, hinged and connected wrong; the keyfall was too deep; proportions were illogical--just to name a few of the mechanical defects which prevented an artistic interpretation of music and even made a respectable rendition of a score difficult if not impossible. The 19th century had been a time of not only artistic decadence but also mechanical decay, as existing instruments were neglected. Denyn's active role in carillon restoration between 1891 and 1915 served to reverse this trend, and was apparently a substantial source of his income for a number of years, at least until 1908.[5] He worked with Désiré Somers (1849-1936) of Mechlin until 1903, from which point he was associated with Felix van Aerschodt. Denyn and Somers were well-known as a team in Belgium, and they rebuilt carillons in Louvain (St. Gertrude 1892), Roeselare (1893), Bergen and Oudenaarde (1894), Brussels, Oostende and Verviers (1895), and Cattistock (England, 1898) according to the Mechlin example.[6] That Denyn insisted on using the Mechlin carillon console as a model in all renovations was the first movement towards uniformity in carillon keyboards.

In 1915, Denyn explained his innovation and summarized the factors which he thought were essential for a good carillon installation in a speech, "Technique et mécanisme du carillon", which he delivered to the Royal Society of Arts in London.[7] He addressed the height of the tower and the design and size of the bell chamber. He insisted

---

[4]Jef Denyn, "Beiaardklavieren" in *Gedenkboek Jef Denyn, "Stadsbeiaardier en Meester van den Toren"* (Mechelen: Beiaardschool, 1947), 203.

[5]Cosaert, 13.

[6]Ibid., 14-20.

[7]Jef Denyn, "Technique et mécanisme du carillon", in *Gedenkboek Jef Denyn, "Stadsbeiaardier en Meester van den Toren"* (Mechelen: Beiaardschool, 1947), 123-137.

on a closed chamber with ample louvered openings. The bell frame was to consist of oak beams, not relying on the masonry of the tower walls for support. He discussed the proper placement of the bells and their suspension. He explained the design of the keyboard, the mechanical connections ("transmission") between the keys and the clappers, and the apparatus affecting the clappers. The two most significant innovations involve clappers and the transmission system. These elements are collectively referred to as the "Denynstelsel" (Denyn System).

Denyn noted the performer's need to have complete control over the clappers and had sought a way to prevent them from making random movements. He kept the clappers in check by connecting them to each other with stabilizing wires to prevent sideways oscillations, and by attaching springs behind the clappers to pull them directly back to their resting position. A faster return of the clapper, and key, allows faster playing--such as quick 32nd note passages, and directly repeated notes especially--as well as more control in soft playing and precise attacks. Furthermore, the use of turnbuckles became a standard means of adjusting the clappers' distance from the bells' inner walls in order to compensate for the expansion and contraction of wire linkages due to weather and use. Provisions for this adjustment had previously been primitive and somewhat ineffective, when present at all.

Denyn also noted another flaw which inhibited the performer's control over the clappers. The most common type of transmission system that was in use is known as the *broeksysteem*,[8] and while simple and relatively inexpensive, it has several disadvantages. Rather than a tight, direct connection, there is considerable play and elasticity in the inefficient linkage of a *broek* system. It makes for an uneven resistance

---

[8]"Breeches System" - breeches in the nautical sense of a life preserver suspended from a rope extended from ship to shore or to another ship. See diagram on page 49.

on the keyboard, a tenacious attack, and limits the exactness with which the clapper-to-bell distance can be regulated. In practice, multiple *broeks* are often necessary for a single note, and long wires thrash noisily from side to side allowing the performer's energy and control to deviate from the path between key and clapper. In order to attain the desired stability Jef Denyn insisted on the use of *tuimelaars*[9] instead of *broeks*. Roller bars were customarily used in automatic playing systems. Perhaps it was due to the heavier action caused by friction in the turning bars that had discouraged the adoption of this system in manual playing mechanisms. Denyn, however, realized that the advantages of the *tuimelaar* system far outweighed any adversities. With the bells arranged in rows, the connecting wires can be of a more uniform length, resulting in a more even gradation of key resistance and a more consistent sound color from bell to bell. The direct, inelastic, right-angled connections provide for a more responsive action.

In effect, the Denyn system was nothing more than the collective application of a number of simple, logical concepts. It was Denyn's insistance on these reforms in carillon design and his promotion of them throughout Belgium and in neighboring countries that sparked a virtual revolution. They made it possible to approach carillon performance from a more artistic perspective. It was at this point that the quality of

---

[9]"Tumblars" or "rollers". These are the same as the rollers in the mechanical action of an organ. See diagram on page 49.

BROEK SYSTEM:

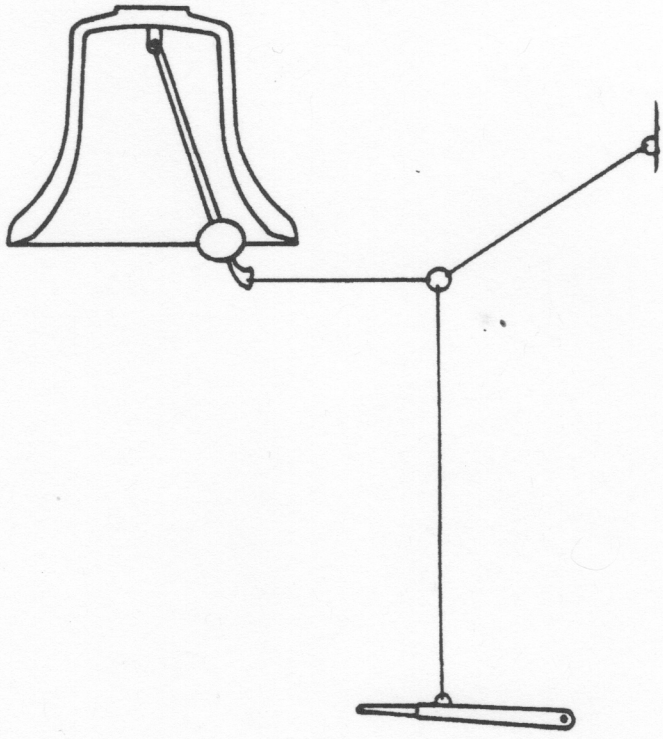

TUMBLER OR _TUIMELAAR_ SYSTEM:

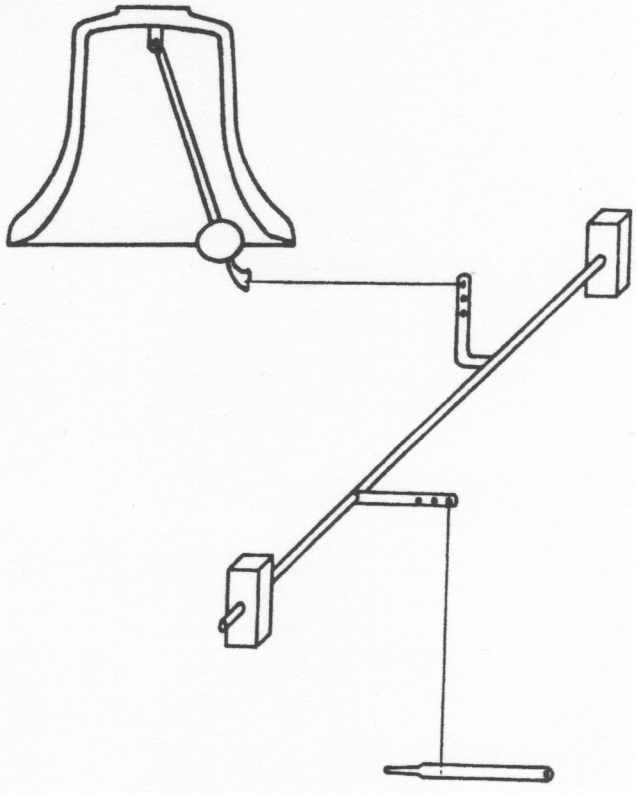

performance for the first time reached and surpassed the level it had known in the time of Matthias van den Gheyn. The performance of Romantic music was enhanced by the ability to play fast passages, and with dynamic and rhythmic nuances. Although his steadfast endeavors to improve the quality of carillon installations may not have been devoid of his own commercial interests, his letters to the Bruges newspaper and the organizational committee for the 1911 Bruges carillon competition[10] show nothing but his concern for the improvement of the mechanism. He refused their invitation--as did a number of his colleagues--to take part in the competition due to the poor state of the instrument.

Denyn discouraged the use of the type of pedalboard that had developped in Holland in which the pedals were hinged under the bench as in organs. Pedals with the hinge in front of the player are now standard everywhere. It is interesting to note that, despite his acquaintance with the bellfounder John Taylor, Denyn made no recommendations concerning the fabrication or tuning of bells--areas in which the old carillon[11] of St. Rombout's are noticeably deficient. These were not conditions for which Denyn had the ability--nor perhaps the knowledge--to effect change.

INCEPTION OF FORMAL CONCERTS

As Denyn's artistry as a performer developed, and since the redesigned instrument in the St. Rombout's tower made his talent more evident, his playing began to draw the attention of listeners. Important among them was the Mechlin city councilman

---

[10]Cosaert, 32-34.

[11]A new Eijsbouts carillon was installed in the tower of St. Rombout's Cathedral in 1981. The carillon which Jef Denyn played remains in the tower. It comprises 49 bells cast by 12 different founders, which is evident in the dissimilar timbres of the bells. The tuning of the individual bells leaves a lot to be desired, and the ensemble is in meantone temperament.

Theodoor de Coster, who suggested that Denyn replace his playing during the weekly market[12] with an evening concert. He was of the opinion that Denyn's playing deserved more attention, and should be offered at a time when there was less street noise.[13] The possibility of attracting people from outside the city--thereby promoting commerce--was not ignored. And so it was that in 1892 a summer series of Monday evening concerts was begun, the 100th anniversary of which was recently celebrated. This important step brought the carillon, from its role in providing background music for the market, to the foreground. From this point forward the carillon was not simply regarded as a folk instrument, but garnered a reputation as a concert instrument as well. Denyn's recitals became increasingly popular, to the extent that extra trains were eventually added to the route between Mechlin and Brussels to accomodate listeners.

As a result of his concerts Denyn made numerous acquaintances, two of whom played an important role in the development of the carillon through their literary efforts. The historian Prosper Verheyden (1873-1948) wrote numerous articles for the Mechlin and Antwerp newspapers, opening the public's eye to the carillon's new status. He was also the editor of the journal of "De Eikel", a society for the promotion of Flemish culture.[14] The American diplomat William Gorham Rice (1856-1945) however, had a profound effect on the history of the carillon. He came to know Denyn and

---

[12]European towns and cities traditionally hold open air markets at least once a week on the town square, which is normally within earshot of the carillon. A festive atmosphere permeates the center of town on market days and the carillon plays an integral part.

[13]Cosaert, 35.

[14]Prosper Verheyden and Désiré Somers were among those who founded "De Eikel" in 1893 "ter aanmoediging der schoone kunsten en ter studie van de moedertaal, benevens behartiging van alles wat kan bijdragen tot de verstandelyke en zedelyke ontwikkeling onzer vlaamse bevolking." (to encourage the fine arts and to study the mother tongue, in addition to furthering everything that can contribute to the intellectual and moral development of our Flemish people.) Cosaert, 39.

the carillon through the efforts of Henry de Coster (son of Theodoor), who lured Americans to the Mechlin summer carillon concert series by sending brochures and posters to the United States via the Embassy. Rice's first book, *Carillons of Belgium and Holland; Tower Music in the Low Countries*, appeared in 1914--the first of several editions and reprintings which served to introduce the modern carillon to Americans.

World War I broke out in 1914 and Denyn stopped playing in the middle of his August 24 concert. He had seen skirmishes from his perch in the tower. He fled to England in time to escape the artillery fire which eventually reached both the St. Rombout's tower and his home. There he waited out the war, returning to Mechlin in 1919. At the 1915 congress of the National Association for Tourism in Arnhem (the Netherlands), the Amsterdam journalist A. Loosjes made a strong plea for the restoration of Dutch carillons using the Denyn System.[15] Not only were carillons typically Dutch instruments, they held great potential in attracting tourists to Dutch cities just as they had in Mechlin. The invitation to play a concert at the congress, sent to Denyn by the Arnhem Tourist Office, did not arrive in England in time, but he did agree to go a month later and advise the city on the renovation of the Arnhem carillon. His advice was widely sought when the news of his plan to visit the Netherlands became known, and Denyn visited 15 other Dutch cities,[16] making recommendations which included the replacement of *broek* systems with tumbler systems, and often a rearrangement of the bells.

The influence of Denyn, his concerts, and his system of carillon design reached

---

[15]Ibid, 57.

[16]Nijkerk, Deventer, Amersfoort, Haarlem, Alkmaar, Doesburg, Zutphen, Schoonhoven, Maastricht, Kampen, Utrecht, Middelburg, Gouda, Gorinchem, 's Hertogenbosch. Cosaert, 57.

far beyond the borders of the Low Countries. The English musician William Wooding Starmer said in 1922:[17]

> Recently however the greatest interest has been shown in carillon music for which the Mechlin Carillon Concerts are directly responsible, so much so, that the great Loughborough War Memorial now being constructed--consisting of a campanile and carillon of 47 bells and costing £20,000--has amongst its strongest supporters those who have been influenced by the beautiful effects of the carillon playing at Mechlin.

It follows logically that the Denyn System was used for American carillons beginning with the two English instruments imported in 1922, given Denyn's connection with England and America through Starmer and Rice. In northern France it was the city of Saint-Amand-les-Eaux that welcomed Denyn often and, in 1923 had their carillon rebuilt according to his specifications.[18] This was followed by the installation of numerous new instruments (most of the carillons in the provinces of Flanders, Hainaut, Artois, and Picardy were lost to WWI) with the Mechlin roller bar system.[19] A few of the keyboards were built by Désiré Somers and Son, and the rest were constructed by the Paccard Bellfoundry as copies of the Mechlin type.

Jef Denyn's success in instigating a revolution can be attributed in part to the combination of talents he embodied. He was a musician, a businessman, and had an aptitude for mechanical things. Although none of these skills were developed to an extremely high level, he applied his knowledge from all of these areas, effecting the

---

[17]William Wooding Starmer, "The influence of Mechlin carillon art on English bell founders and bell music," in *Beiaardkunst; Handelingen van het Eerste Congres; Mechelen 1922*, ed. L. Godenne (Mechelen, n.d.), 67.

[18]Maurice Lannoy, "Jef Denyn et les carillons de France," in *Gedenkboek Jef Denyn* (Mechelen: Beiaardschool, 1947), 175-184.

[19]Seclin (1931), Bailleul (1932), Paris: Sacré-Cœur (1934), Reims (1936), Paris: Eglise St.-Jean Bosco (1937), Blois (1938), Chambéry (1938), Annecy (1938), Cholet (1939), Lisieux (1946), le Mas-Rillier (1947). Ibid.

propagation of a system which signifies important progress. In 1947 Staf Nees said: "Er is geen beiaard klavier meer in het land of het is veranderd naar het Mechelsch stelsel" (There are no more carillon keyboards in the country [Belgium] that haven't been changed to the Mechlin System).[20]

NEED FOR FORMAL INSTRUCTION

The two carillon playing competitions held in Mechlin in 1897 and 1910 represent early attempts to gain a wider appreciation for the carillon and, more importantly, to promote a higher level of performance among carillonneurs. They also mark the beginning of a new stream of carillon composition emanating from Mechlin. A required work was composed for use in each of the competitions: *Sonate voor beiaard* by Gustaaf van Hoey[21] in 1897, and *Andante Cantabile* by Jef Denyn in 1910. In addition, Denyn composed the *Preludium in sol klein* for his performance in the closing concert for the 1897 festivities. Denyn wrote a report over the latter competition, in which he criticized the generally poor performances, the inappropriateness of the pieces played, and the inability of the competitors to make a free harmonization of Peter Benoit's *Het Lied der Vlamingen* (one of the requirements) that both used the carillon idiomatically and preserved the original character of the piece.[22] The need for a formal system of instruction for carillonneurs became obvious.

In 1913 Edward de Keyser, president of the General Netherlands Alliance, drew

---

[20]Staf Nees, "Jef Denyn als Stadsbeiaardier en Bestuurder van de Beiaardschool," in *Gedenkboek Jef Denyn*, 47.

[21]Gustaaf van Hoey (1835-1913) was director of the Mechlin Conservatory, organist of the St. Pieterskerk, had studied with Fétis, and was a friend of Edmond van der Straeten and Peter Benoit.

[22]Lehr, *Van paardebel tot speelklok*, 293.

up a provisional prospectus for a National Carillon School in which he stated that the fear existed that, along with Denyn, the magic of his art would eventually disappear.[23] Furthermore, De Keyser noted in his 1912 speech at the 32nd Dutch Language and Letters Congress that bell music is preeminently a musical tradition of the Low Countries which therefore must never be lost.[24] Henri de Coster was the other driving force behind the Carillon School who convinced Denyn to take the helm. Denyn enlisted the services of the composer Jef van Hoof (1886-1959) to teach harmony, counterpoint, and composition. Denyn's proposed curriculum consisted of carillon performance, harmony, counterpoint, composition, transcription, campanology, carillon history, general music history, cultural studies such as art, science, and literature, as well as foreign languages. This curriculum was in sharp contrast with the typical musician's conservatory training which focused on developing virtuosity; it more closely paralleled Peter Benoit's principles for the development of artists with a broad education.[25] The Minister of Arts and Sciences was prepared to subsidize the school once it was opened; only the funding to begin was needed.[26] When World War I broke out, the efforts towards the school's realization were postponed.

1922 RINGS IN A NEW ERA

The year 1922 is of great historical significance for the carillon. Besides the

---

[23]Edward de Keyser, "Nationale Beiaardschool, 1913; Voorloopig [sic] Prospectus," in *Jubileumboek, 1922-1972; Koninklijke Beiaardschool Jef Denyn te Mechelen*, ed. Willy Godenne and Henry Joosen (Mechelen: Koninklijke Beiaardschool, 1973), 77.

[24]Lehr, *Van paardebel tot speelklok*, 296.

[25]Cosaert, 51.

[26]Lehr, *Van paardebel tot speelklok*, 296.

celebration of Denyn's 35th year as carillonneur of Mechlin, the Carillon School opened its doors at a ceremony during the first Congress for the Carillon Art.

Considerable financial support for the school came from America:[27]

> Thanks to the dynamic intervention of Mr. Herbert Hoover, First President of the CBR (Commission for Relief in Belgium), Brussels Bureau, and with the advice of the Belgian Ambassador at Washington, Baron Cartier de Marchienne, we received at Mechlin a cheque of 2.000 dollars.
>
> This happened thanks to the Rice's, just after the creation of the Carillon School, in 1922. Fifty years ago.
>
> Every year, they, personally, provided a financial support and collected among their friends also in the United States. They made Jef Denyn and his carillon renowned in America, Canada and Australia.
>
> This generosity lasted for more than ten years. In 1935, in his Annual Report, Mr. Prosper Verheyden declared that the American financial support--since years--covered nearly 2/3 of the School's budget. It was not the abundance but enough to cross the years of depression.
>
> Says Mr. Rice in 1928: "We must keep the School going, if possible, and I shall exercise my brain to find out ways."

And Rice's brain had already been busy, as is evident in this 1926 letter from John D. Rockefeller, Jr.:[28]

> Dear Mr. Denyn:
>
> Mr. William Gorham Rice has written me of his interest in your Carillon School, which he is seeking to help finance through some of his friends.
>
> Because I am so much interested in carillons, because I have such high regard for you as the greatest living carillonneur, because I am so fully in sympathy with the purposes of your school, to which you are giving yourself so generously and unselfishly, I hope you will allow me to have a little part in its support, through the enclosed contribution.
>
> Wishing you every success in this splendid enterprise, and with pleasantest memories of our meeting at Loughsborough [sic], I am, . . .

For some reason, only carillon performance, harmony, campanology, and

---

[27]Willy Godenne, "The Undelivered Speech of Willy Godenne to Mr. Milford Myhre, President of 'The Guild of Carillonneurs in North America', and his friends, on their arrival at the Mechelen Congress," in *Jubileumboek, 1922-1972*, 330-331.

[28]*Jubileumboek 1922-1952*, 17.

versteek (the method of placing the pins in the automatic playing mechanism) were included in the 1922 curriculum. Given the physical nature of carillon playing, and the traditional role played by Flemish women in this era, it is notable that women were admitted to the program. This was not the case under Denyn's successor, Staf Nees.

Fifty-three carillonneurs were graduated during Denyn's tenure at the school: 26 Belgians, 12 Dutch, 4 English, 2 French, 1 New Zealander, 3 Canadians, and 5 Americans.[29] The 1922 Congress for Carillon Art was attended by over 125 people from Belgium, the Netherlands, France, and the United States. A special exhibition featured seven rooms of carillon-related materials and was open for over a month. Diverse campanological and historical topics were addressed by carillonneurs, bellfounders and musicologists representing all four countries. For example, bellfounder Marcel Michiels spoke on the bell and its overtones; W.G. Rice discussed the growth of interest in carillons in the United States; Joh. W. Meyll compared the roller bar and *broek* systems; and Prosper Verheyden presented a lengthy study on the carillon repertory of Joannes de Gruytters.[30]

Jef Denyn spoke on a topic of perpetual controversy: "Wat zal de beiaard spelen?" (What shall the carillon play?) It is interesting to note that Denyn's programs in the first years of his summer concert series had a rather French flavor and were comprised of transcriptions--often of opera arias and overtures--and of arrangements of popular melodies.[31] Members of *De Eikel* realized that the public nature of the carillon made it quite well-suited to have a positive, elevating effect on the common

---

[29]William De Turk, "William Gorham Rice and the North American Carillon Movement," *Bulletin of the Guild of Carillonneurs in North America* 34 (1990): 22.

[30]*Beiaardkunst 1922.*

[31]Cosaert, 36-37.

man, as well as to help with the development of a Flemish music culture. They approached Denyn and urged him to play as much Flemish music as possible. Flemish folksongs became a staple in his programs beginning in 1894.[32]

In his speech at the 1922 congress, Denyn gave his views not only on the choice of literature, but also on the appropriate order of the program. Simple folksongs, popular songs, and art songs of native and foreign origin played an integral role. He also included "classical" music and pieces of "distinctive character", and encouraged the selection of opening and closing pieces that were particularly well-suited for attracting the listeners' attention and leaving them deeply moved. He also admonished carillonneurs to make a constant effort to "purify" their repertory as they gained experience. He disapproved of the common practice of playing arrangements of fragments from operas that do not lend themselves well to adaptation to the carillon. He noted some exceptions to the majority whose modulations often go beyond the limitations of the carillons' meantone temperament.[33]

FLEMISH PERFORMANCE PRACTICE

One of the essential elements in Denyn's success in the revival of carillon music was his new style of playing. He apparently realized that one of the inherent flaws of the carillon is its inability to accurately reproduce correct note values. Furthermore, he couldn't help but be aware of a defect in the Mechlin carillon that was common to most instruments in that time: the treble bells lacked resonance, producing more of a "klunk" than a sonorous "ring". Denyn found that he could mask these deficiencies by playing

---

[32]Ibid., 40.

[33]Jef Denyn, "Wat zal de beiaard spelen?," *Beiaardkunst 1922*, 101-112.

tremolando[34] in the treble range. Additionally, the tremolo provided an opportunity for crescendi and diminuendi during the course of each note. With this technique the carillonneur could attain the Romantic ideal of the long, legato melody. Denyn called it *gebonden zang* (connected song). He said:[35]

> Het laat meer verscheidenheid in de nuanceering toe. Het klankgehalte is meer smeltend en vibreerend, trillender, levendiger, zenuwachtiger. Dat geeft aan de vertolking meer charme, meer koloriet.
>
> It allows a greater variety of nuances. The sound quality is more melded and vibrant, resonant, livelier, more nervous. That gives more charm, more coloration to the interpretation.

The success of the tremolo, requiring dynamic and rhythmic precision, is dependent on the optimal conditions of the instrument: they are virtually impossible to execute successfully on a *broek* system. Here lies another reason for Denyn's propagation of the tumblar system.

Denyn taught this technique to the students at his school, of course, and its use became the basis for the Flemish style of playing. The Flemish style developed a bad reputation beyond the borders of Flanders, which can be attributed to a couple of factors. It is certainly partially due to the repertory, which emphasizes folk music, romanticism, and heavy sentimentality--a repertory which is often spurned for its lack of musical depth. But it is more likely that the style finds disfavor because it is generally not well-executed. Many have attempted, in vain, to imitate the style, lacking Denyn's musical insight. In addition to being adept at the technique, the performer must employ a large measure of good taste. Jef Denyn even said that there were Belgians who

---

[34]The carillon tremolo consists of the rapid alternation of notes--usually two, although occasionally more than one note per hand are played--often an octave apart, although other intervals are common.

[35]Lehr, *Van paardebel tot speelklok*, 294.

did not use, but rather, misused tremolos.[36] There was a group of Dutch carillonneurs who held out against the Flemish style and the Denyn system. But the Dutch and Flemish peoples did--and continue to--engage in constant rivalry. The Flemish refered to the Dutch style as *oer-Hollands* (primitive Dutch)--since some continued to play in their simplistic style which came as a result of the limited possibilities their system had to offer.

DENYN'S STYLE OF COMPOSITION

Denyn left seven carillon compositions[37] which represent the first attempt to write in a style idiomatic to the instrument since Matthias van den Gheyn. The pieces generally have a slow harmonic rhythm and take advantage of the resonance of the bells, especially the sonorous bass bells. According to Jef Denyn, he composed the B-flat and G Minor preludes in order "to demonstrate the technical and sensitive interpretation possibilities on the carillon."[38] The preludes have an improvisational character and feature dramatic dynamic contrasts, crescendi and dimenuendi. All the pieces require tremolo, and three use the low B-flat pedal.

It is probable that Jef Denyn's style of performance and composition was not entirely original, but greatly influenced by that of his father Adolf. The Englishman R.H.

---

[36]Ibid.

[37] -Prelude in G Minor (1897)
-Prelude in C (1897)
-Prelude in B-flat (1904)
-Unwritten Prelude (n.d.)
-Andante Cantabile (1910)
-Ave Maria (1914)
-Siciliana (after 1922) Cosaert, 96-98.

[38]Gaston van den Bergh, "Carillon compositions by Jef Denijn," *Bulletin* 17, no. 1 (May, 1966): 44.

Haweis wrote about Adolf Denyn in 1878:[39]

> M. Denyn then played me some admirably selected flowing melodies with full legato accompaniments in the style of *Adelaide* and *Casta Diva.* Then he gave me a specimen of bravura passages, using the great nine-ton and six-ton on a rattling accompaniment of demi-semiquavers on the treble bells. Next after a rapid passage of sweeping arpeggios, he broke into a solemn and stately movement, which reminded me of Chopin's *Funeral March.* This was followed by an elaborate fantasia on airs from the *Dame Blanche*.....He called my attention especially to the complete control he had over the 'pianos' and 'fortes', now lightly touching the bells, now giving them thundering strokes.

"Rattling accompaniment of demi-semiquavers on the treble bells" seems to suggest that Adolf was using tremolos. His choice of repertory, use of arpeggios, use of dynamic contrast, and versatility with regard to the choice of register for the melody and accompaniment are all applicable descriptions of Jef Denyn's style as well.

The *Unwritten Prelude* is a unique piece in the carillon repertory. It was an improvisation that Denyn never notated. He played it repeatedly however, and taught it directly to his students who subsequently passed it on to theirs. Each of Denyn's performances of the piece was different, as are most contemporary renditions.

ARTISTIC STANDARDS

Denyn's focus as a performer was on the artistic essence of music. In 1915 he said:[40]

---

[39]R.H. Haweis, "Bells of Belgium," in *The Echo*, 25 oct 1878 (London); quoted in Cosaert, 9.

[40]Jef Denyn, "Technique et mécanisme du carillon" in *Gedenkboek Jef Denyn*, 137.

Le carillonneur doit, en général, jouer de mémoire. Une lecture, suivie de la musique le distrait de son clavier, l'empêche de se donner librement à la manipulation de la touche.

Toute interpretation doit porter un cachet personnel. Ces prédispositions spéciales doivent être doublées d'initiative et de développement intellectuel. Il en manque malheureusement à beaucoup de carillonneurs, et par le fait plus d'un doit forcément négliger le côté artistique.

As a rule, the carillonneur must play from memory. Reading music is a distraction from the keyboard, and prevents an uninhibited command of the keys.

All interpretations must have a personal style. These musical insights must be developed intelligently and arduously. Unfortunately many carillonneurs have no musical vision and are therefore forced to neglect the artistic side.

Denyn's quest to improve the instrument mechanically came as a result of his desire to be able to achieve this artistry in his performances. He made it clear that he was only interested in performing on responsive instruments. During an American tour in 1927, Denyn refused to play in Princeton due to the poor condition in which he found the carillon.[41]

CONCLUSION

Both literally and figuratively, Jef Denyn towered above his contemporaries.[42] His appearance in the carillon world marked the end of a century characterized by complacency and acceptance of an inadequate status quo. He inspired a professional approach to the instrument--in both practical and scholarly senses. He revolutionized the carillon world and laid the foundation on which the art has been built during the remainder of the 20th century.

---

[41]Cosaert, 68.

[42]Two writers have used similar plays on the word "tower": Staf Nees in *Gedenkboek Jef Denyn*, 258; and Koen Cosaert, 12.

V. THE TWENTIETH CENTURY

BELLTUNING REDISCOVERED

During the last decade of the 19th century Canon Arthur B. Simpson, rector of Fittleworth in Sussex, occupied himself with the tone of bells.[1] He was distraught with the want of harmony in the famous carillons of Bruges and other Belgian cities, and with the difficulty of accurately discerning the pitch of church bells in his native England. Simpson studied local bells and travelled widely, examining Hemony bells as well as the wide variety of specimens in the St. Rombout's carillon in Mechlin. He analyzed the research of the natural philosopher Lord Rayleigh[2] which compares five bells cast by five founders, spanning 240 years. The rector conferred regularly with the John Taylor & Co. bellfounders regarding his investigations, and published two articles about bell tuning in *The Pall Mall Magazine* in 1895-96.[3] He was convinced that the fundamental, nominal, and hum-note[4] were meant to be in octaves but, in practice, rarely were. His

---

[1]Michael J. Milsom, "John Taylor & Co. and Canon Simpson," *Bulletin of the Guild of Carillonneurs in North America* XXXII (January, 1983): 19.

[2]Lord Rayleigh, "On the Tones of Bells," *Philosophical Magazine* 5th ser., 29, No. 176 (January, 1890): 1-17.

[3]A.B. Simpson, "On Bell Tones," *The Pall Mall Magazine* 7, no. 30 (October 1895): 183-194. "On Bell Tones, No. 2," *The Pall Mall Magazine* 10, no. 41 (September, 1896): 150-155.

[4]Generally, the lowest five partials of a bell are tuned. They are: the fundamental(the tonic), the hum-note (an octave below the fundamental), the octave(an octave above the fundamental--the English refer to this as the nominal, as they name the bell after the pitch of

purpose was not only to inspire bellfounders to produce sets of bells which agreed with the presumed intentions of those who had conceived them, but also to cause existing bells and peals to be so rectified as to be much more completely in tune than had yet been the case. He stressed the importance that any bell that was to be included in a peal or a carillon be not only in tune with itself but that at least one of the sets of partials in the series of bells should be in tune with itself, i.e., all the nominals or all the fundamentals. He noted that "The Englishman tunes the nominals, and neglects the fundamentals; while the foreigner tunes the fundamentals, and (comparatively) neglects the nominals."[5] Simpson gave instructions for altering each of the five partials, and offered his help to all bellfounders who wished to make themselves masters of the art.

It was John William Taylor who first reaped the benefits of Canon Simpson's toils. It was Robert Taylor who had established a foundry in Cambridgeshire in 1782, and moved it to Devon and Oxford before finally settling in Loughborough in 1840. His son John continued founding church bells there. A special tuning shop was built at his foundry in 1895 and large sets of accurate tuning forks were purchased.[6] The foundry had sought a machine which was able to tune bells over the entire inside wall, and in 1896 acquired a lathe capable of tuning bells of up to 2 1/4 tons. Prior to this time they had attempted to cast bells to pitch--to produce "maiden" bells which, untouched, would ring true. Rudimentary means had been employed to correct tonal inexactitude:

---

this partial), the tierce(a minor-third above the fundamental), and the quint(a fifth above the fundamental.

The hum-tone, fundamental, and octave are generally the most prominent of the partials, followed by the tierce, then the quint. The quint decays the most rapidly, followed by the octave, the fundamental, the tierce, and finally the hum-tone which resonates the longest.

[5]Ibid., vol. 7, 192.

[6]Peter Cake, "Taylor True-harmonic System," *Bulletin of the Guild of Carillonneurs in North America* 37 (January 1988): 24.

hammer and chisel. In effect, Simpson had rediscovered the secret of bell tuning which had been lost for over 100 years. The "Taylor True-Harmonic System"--as it was called--simply required that the five principle partials of a bell be adjusted to the proper relative pitches and their relative intensities regulated.

REVIVAL OF CARILLON BUILDING

The significance of this development relevant to carillons was not to become manifest until after World War I. At this point another English firm, Gillett & Johnston (G&J), began producing carillons according to Canon Simpson's recommendations. The company had begun casting church bells in 1877 when Arthur A. Johnston (d.1916) became a partner to William Gillett, who had established himself as a manufacturer of tower clocks in Croydon, Surrey, in 1844. Their carillons were made under the leadership of Cyril F. Johnston (d.1950). Both firms--Taylor and G & J--embarked on a new endeavor, effectively reviving the art of carillon building for the 20th century. Each produced over 40 carillons which were placed in 11 countries around the world before production ceased during World War II.[7] Eleven Taylor carillons and ten built by G & J were installed in Dutch towers between 1911 and 1934; only one (a gift from Americans) was hung in a Belgian tower.[8] However, it was the combination of the lucrative American market, Simpson's perseverance, and the English firms' enterprise that resulted in the most momentous consequences for the carillon world. America was still in the early stages of the evolution of the carillon art: it was several centuries behind Europe. America imported a modern carillon art of the 20th century while the

---

[7]Percival Price, *Bells and Man* (Oxford: Oxford University Press, 1983), 227.

[8]Lehr, *Van paardebel tot speelklok*, 325-26.

European continent--at least in terms of the majority of its instruments--was entrenched in the 18th and 19th centuries.[9]

Despite the prominence of the Taylor and Gillett & Johnston foundries in carillon building during the second quarter of the 20th century, the instrument found relatively little favor in Britain. Traditionally, bells have been used there for change ringing. Only 17 carillons are to be found on the British Isles, two of which are in Ireland and five in Scotland.[10] If Charles Burney's remarks (which refer specifically to the quarter hour chimes in Amsterdam) are at all representative of the British mentality, it is not surprising that they resisted the bell tradition of the Low Countries: "In a few days time I had so thorough a surfeit of them, that in as many months, I really believe, if they had not first deprived me of hearing, I should have hated music in general."[11]

Two foundries on the Continent, Van Bergen and Michiels, made carillons in the 20th century with a modest amount of success. During the 1930's Harmannus T. van Bergen of Heiligerlee, the Netherlands, began making carillons and reached a degree of proficiency in tuning bells that had been unheard of in Holland for two centuries. In Belgium, during the same period, it was Marcel Michiels, Jr. (d.1962) who was the first Fleming in over a century to tune a carillon with any measure of competence. Both foundries managed to sell a few instruments in America, and Van Bergen even established a foundry in Greenwood, South Carolina in 1953. Neither founder ever attained the level of quality exhibited by the two English founders, and both are now defunct.

---

[9]The significance of the English bellfounders in the American carillon movement is discussed further in the following chapter.

[10]John Camp, *In Praise of Bells; The Folklore and Traditions of British Bells* (London: Robert Hale, 1988), 170.

[11]Burney, 298.

Two other Dutch foundries, Petit & Fritsen and Eijsbouts, took up carillon building, and refined Canon Simpson's precepts to the extent that they succeeded in tuning bells to a degree of perfection never before obtained. The Petit & Fritsen foundry in Aarle-Rixtel began tuning its carillon bells in 1939. Eijsbouts made its first carillon in 1949, using an electronic device for tuning as opposed to the common practice of using large tuning forks.[12] The firm mounted the carillon on a flat-bed truck in order to make the instrument entirely visible to the public, as well as to tout its perfectly tuned bells all over western Europe.

The French founder Georges-Francisque Paccard (d.1914) of Annecy-le-Vieux made his first carillon in 1895[13]--the same time Canon Simpson was searching for the key to tuning. During his travels Simpson heard some Paccard bells and remarked: "They are remarkably good and sweet-toned, and are in much better tune with themselves than the generality of bells that I have examined. But still the same general errors are apparent. In three out of four, the nominals are a little sharper than the fundamentals, and the humnotes decidedly sharper than the nominals."[14] These were most likely not carillon bells, however. Succeeding generations of the Paccard family have had remarkable success in tuning carillon bells. It was Alfred Paccard who developed bell profiles that tend to intensify the fundamental and subdue the minor third

---

[12]Lehr, *Van paardebel tot speelklok*, 348.

[13]Verheyden, *Beiaarden in Frankrijk* (Antwerp: De Sikkel, 1926), 64.

[14]Rev. Arthur B. Simpson, M.A., *Why Bells sound out of Tune and How to Cure them* (London: Skeffington & Son, Piccadilly, W., 1897), 15.

partial,[15] the hallmark of the Paccard Foundry today.

WWII & THE PLUNDER OF BELLS

The two antagonizing sisters in Christian Morgenstern's poem entitled *Die Schwestern*[16] are a bell and a cannon. Sisters through the ages, not only has it been common for a founder to give form to both--cannons in time of war, bells in peace--but often the same bronze has run through both molds. Sibling rivalry is ever evident; bronze is amassed to make bells and bells are melted to make cannons. During wartime, bells are regarded as the most copious source of copper and tin. In the two World Wars, the toll was highest in Germany. During the first, between 60,000 and 70,000 bells were destroyed.[17] More than twice as many were lost to the second, representing nearly one hundred million pounds of bronze bells stolen from Germany, Austria, Italy, Hungary, the Netherlands, Belgium, France, Poland and Czechoslovakia.[18]

The Dutch government in 1937 had anticipated that they themselves would need bell metal for defense purposes, and the Federal Monument Preservation Service (Rijksdienst voor de Monumentenzorg) requested that the Dutch Bell and Organ Board (Nederlandsche Klokken- en Orgelraad) make a list of the bells that could be sacrificed in time of war. An inventory of all the bells in the Netherlands was completed in 1940

---

[15]Harmannus H. van Bergen, "The Van Bergens, Bell-founders, Past, Present and Future," *Bulletin of the Guild of Carillonneurs in North America* 30 (January 1981), 32.

[16]Christian Morgenstern, "Die Schwestern," *Werke und Briefe* (Stuttgart: Urachhaus, 1990), 243.

[17]Margarete Schilling, *Glocken und Glockenspiele* (Rudolstadt: Prisma Verlag Gütersloh, 1982), 36.

[18]Nearly 150,000 bells. Total weight of 45,198,000 kilograms. [99,644,414 lbs.] No numbers are known for Russia and Yugoslavia. André Lehr, *Van paardebel tot speelklok*, 345.

and a list was given to the Minister of Education, Arts, and Sciences of the most valuable tolling bells and the 28 carillons that were to be saved. The criteria were founder and date--not quality of timbre. A large "M" (for Monument) was painted on each of these bells, and a document printed in English, French, Dutch, and German was issued to their owners. It read[19]:

> Her Majesty's Government having exempted a very limited number of bells from requisition as historical monuments of the greatest importance, instantly beseeches the Commanders of the military forces of foreign powers likewise to respect these bells marked with an M.

The federal commissioner for the occupied Dutch territory, Seyss Inquart, formally requisitioned metal from the Netherlands on 21 July, 1942. It included all sorts of objects made of copper, tin, nickel, lead, or their alloys; hence, they sought milkcans, memorial plaques, beer pipes and brewery kettles, and above all--bells.[20] Requisitioned bells were divided into three categories: "A", the most modern bells of no great significance which could be taken directly to Germany; "B", those representing a certain artistic value, yet to be surrendered in order to fulfil the demanded percentages; and "C", those so valuable that they were to be held as long as possible, in the hope that, if unused and not damaged, these could be returned to their towers.[21] Further, the Department for the Conservation of Artworks convinced the Germans in February of 1943 that it was necessary for their expert to come to the Dutch depots and reexamine

---

[19]Wim Truyen, "A Bell Atlas," *Forty-five Years of Dutch Carillons; 1945-1990* (Asten: Netherlands Carillon Society, 1992), 170.

[20]Lehr, *Paardebel*, 334-35.

[21]Lehr, *Paardebel*, 340.

some bells, marked "P" (Prüfung), before shipping them to Germany.[22] Naturally, in addition to those sequestered, a number of carillons were damaged or destroyed in warfare.

In the final analysis, approximately 4,700 bells from the Netherlands, with a total weight exceeding four million pounds, were permanently lost.[23] Of the 77 carillons that existed in the Netherlands prior to the war, 22 were ruined during the war.[24] Perhaps it came as a result of the tactic of flattering the German military governor, Seyss-Inquart, that 23 of the 26 historic Hemony carillons were preserved. It is reported that the Dutch told him that his personal vanity would take pride in all the art treasures remaining in his kingdom when he was made king of the Netherlands by Hitler after a Nazi victory,[25] and that the Dutch carillons surpassed the quality of those in Germany.

Dutchman Loek Boogert notes that when the sound of the bells of Westminster Abbey was broadcast by the BBC to proclaim the victory of the allied forces in May, 1945, "the pealing of bells was conspicuously absent from this celebration atmosphere that filled the streets and squares in most parts of liberated Holland in spite of the fact

---

[22]Truyen, 171.

[23]Lehr reports 4,660 bells/1,918,000 kg. Truyen reports 4,793 bells/1,872,813 kg. Lehr, *Paardebel*, 344. Truyen, 172.

[24]Romke de Waard, "Carillon art" *Forty-five Years of Dutch Carillons; 1945-1990* (Asten: Netherlands Carillon Society, 1992), 27.

Henry de Coster says that the Germans made off with 30 carillons from Holland. Henry de Coster, Uccle (Brussels) to Willy Godenne, 25 December 1949, *Jubileumboek 1922-1972*, 166.

[25]Percival Price, "The Bells Came Down" *The Quarterly Review*, 12.

that The Netherlands had always been a country with a rich heritage of bells."[26]

The Belgians took a different stance in their resistance to the German authorities. The confiscation of Belgian bells was ordered in 1941, but delayed for nearly two years. In a collective letter, the bishops filed a protest with General von Falkenhausen: "The bells cannot be transferred without the consent of the ecclesiastical authorities. We will never consent to a confiscation which, under the present circumstances, would have no other result than the use of them for war purposes."[27] When the requisition commenced in 1943 they published a strong protest which was read from all pulpits throughout the country:

> In the name of religion, we disapprove and condemn the seizure of the bells. They cannot be put to any profane use or be taken away without the consent of the ecclesiastical authorities. We solemnly declare that we oppose with all our episcopal might a measure which has but one aim: to transform the bells into engines of war and death. It is possible that in Germany and in Italy the bishops will, without protest, submit to a measure which in their hearts they condemn as much as we do. In their opinion, patriotism explains their toleration of an evil which coincides with religious duty and our silence would be cowardly and treacherous.....Our episcopal duty forces us to declare that any collaboration given to the seizure of the bells in our churches is completely illicit. We demand, therefore, that all priests and laymen keep a passive but calm attitude in the matter.[28]

At that point the *Commission pour la sauveguarde des cloches en Belgique* was formed, and the agreement was made with the German authorities that certain exceptions would be made. Carillons were exempted from confiscation, provided that weekly concerts continued to be performed on them. Furthermore, bells cast in or before 1450

---

[26]Loek Boogert, "Seven Centuries," *Forty-five Years of Dutch Carillons; 1945-1990* (Asten: Netherlands Carillon Society, 1992), 12.

[27]Lefévere, 13.

[28]Ibid., 14-15.

were exempt, and all bells were registered in four categories according to the dates of their casting: 1) 1850 to present, 2) 1790 to 1850, 3) around 1700 to 1790, and 4) bells from before 1740.[29] Henry de Coster, president of the board of directors of the Belgian Carillon School, credits their energetic intervention, and the memory of the immortal Jef Denyn, for saving the Belgian carillons--numbering at least 60--from the melting pot:[30]

> L'exposé du prestige de notre Ecole internationale de Carillon, dérivant de la réputation universelle de notre cher et regretté Directeur Jef Denyn, a déterminé les Allemands à épargner tous les carillons de Belgique, après les représentations faites par notre Conseil d'Administration, au Département "Kunstschutz" de la Militär Verwaltung, où nous fûmes reçus par le Dr. Köhn, en mars 1943.
>
> Il est impossible d'attribuer le résultat heureux de notre attitude à d'autres qu'à nous-mêmes, pour la raison décisive que personne n'a pu, à la Militär Verwaltung, imposer autant d'autorité et de compétence en matière de carillon, que les représentants eux-mêmes de feu Jef Denyn et de son Ecole.
>
> C'est l'Ecole de Carillon de Malines, c'est nous qui avons obtenu dans le cabinet du Dr. Köhn, à ce délégué par le "Kunstschutz", le modus vivendi qui épargnait tous les carillons de
>
> The prestigious status of our international Carillon School, stemming from the universal reputation of our dear and missed Director Jef Denyn, has compelled the Germans to save all the carillons of Belgium, after the pleas made by our Board of Directors, at the "Art Protection" Department of the Military Administration, where we were received by Dr. Köhn in March, 1943.
>
> It is impossible to credit anyone but ourselves with the fortunate results of our conduct, for the undeniable reason that no one could have commanded as much authority and jurisdiction from the Military Administration, in carillon-related matters, as the representatives themselves of the late Jef Denyn and his School.
>
> It is the Carillon School of Mechlin, it is we who have obtained, in the office of Dr. Köhn--the representative of the "Art Protection"--the modus vivendi which saved all the carillons

---

[29] Ibid., 14.

[30] Henry de Coster, Uccle (Brussels) to Willy Godenne, 25 December 1949, *Jubileumboek 1922-1972*, 164-6.

> Belgique et toutes les cloches englobées dans ces carillons, sans distinction d'ancienneté ni de valeur. C'est devant nous que cet engagement a été pris, après une démonstration d'ordre didactique et technique qui a duré trois quarts d'heure.
>
> of Belgium and all the bells included in those carillons, regardless of their age or value. It is before us that this commitment was made after an appeal of a didactic and technical nature that lasted three quarters of an hour.

The Carillon School was often called upon by the Germans to ascertain the status of a bell: carillon vs. tolling, profane vs. sacred. The School always insisted that the bells in question were part of a carillon--even when they were not.

Belgians are known to have attached a provisional keyboard to threatened tolling bells in various towers in an attempt to save them. This stratagem proved effective, for example, in the Benedictine Abbey at Maredsous[31]:

> Au nombre de neuf, ces cloches furent reliées entre elles et commandées par un clavier (type Malines) pour leur donner l'apparence d'un carillon. Travail opéré par l'atelier de menuiserie, sous la direction de notre ami Omer Michaux.
>
> Alors que Michaux était en train de fixer les câbles au clavier situé dans la chambre en-dessous des cloches, deux officiers allemands vinrent mesurer le diamètre des cloches. Le voyant occupé, ils demandèrent au Père Directeur ce qu'il faisait. Celui-ci de leur répondre qu'en vue des pèlerinages prochains à la Basilique, il réfectionnait le petit clavier sur lequel le Père organiste devait improviser des airs liturgiques. Persuadés qu'ils se trouvaient encore en face d'un carillon, les Allemands se
>
> Numbering nine, these bells were linked and connected to a (Mechlin-type) keyboard to give them the appearance of a carillon. The work was done by the carpentry shop, under the direction of our friend Omer Michaux.
>
> While Michaux was in the cabin below the bells, attaching the cables to the keyboard, two German officers came to measure the diameter of the bells. Seeing him working, they asked the rector what he was doing. He replied that considering the pilgrimages near the Basilica, he was restoring the little keyboard upon which the Reverend organist had to improvise liturgical melodies. Convinced that they had come across another carillon, The Germans withdrew.

---

[31]De Coster letter, 181-82.

retirèrent.

In one instance, in the town of Ath, they installed loudspeakers and a phonograph in a tower where they had assembled bells from nearby towers to bluff the Germans.[32]

In the final analysis, Belgium lost over 4,000 bells with a total weight exceeding six million pounds.[33] In that the majority of these were heavier, tolling bells, Belgium lost fewer carillons, fewer bells in general, but considerably more bell bronze than did the Netherlands.

Just as during the French Revolution, the cry of the Lowlanders during the second World War was:

Wie met klokken schiet	He who shoots with bells
Wint den oorlog niet.	Shall not win the war.

The situation in France was much less disastrous, at least as far as bells were concerned. The governments had agreed that the worst statues around the boulevards would be taken instead of the bells. In reference to general Philippe Pétain, a popular expression arose: "Pétain a sauvé les cloches pour nous!"[34] (Pétain has saved the bells for us!) Bombardments, nonetheless, claimed some instruments there. The primary wartime effect on bells in Britain was their silencing. A control of Noise Order came into effect in June, 1940, banning ringing except to signal an invasion.[35]

World War II was undoubtedly the most extensive and most devastating pillage of

---

[32]Lehr, *Paardebel*, 343; and Price, "The Bells Came Down", 13-14.

[33]Lehr reports 4,220 bells/2,790,000 kg. Lefévere reports 4,613 bells/ 3,514,126 kg./4 carillons. Lehr, *Paardebel*, 345. Lefévere, 15.

[34]Price, *Bells and Man*, 232.

[35]Camp, 25.

bells in the history of man.

BELLFOUNDING AFTER THE WAR

In the aftermath of the war, Dutch bellfounders found themselves in a favorable situation to prosper. The government banned the importation of bells and subsidized the restoration and replacement of damaged and destroyed instruments. The Ministry of Education, Arts and Sciences began an advisory committee for the installation of old and new bells and carillons. Lost instruments were to be replaced with new ones; existing instruments were to be enlarged to four octaves; new carillons were to be installed in towers wherever possible. High standards were set for the quality of new instruments. The Ministry of Finances acquired over two and a half million pounds of broken bells from Hamburg which could be melted and reused for new bells.[36]

During the war, the ship "Hoop op Zegen" loaded with pilfered bells (107 "M" bells and 148 carillon bells[37]) sank in the IJsselmeer en route to Germany. After the war, the ship was raised and the Dutch government appointed physicist Engelbert Wiegman van Heuven to conduct a thorough examination of the bells. He published the results in a doctoral dissertation[38] which dealt with tuning, methods of measuring partials in bells, reverberation time of hum-tones and other partials, sound radiation of bells, and statistical comparison of historical bells. The Eijsbouts bellfoundry, which began building carillons in 1947, promptly took advantage of Van Heuven's scholarship.

---

[36]1.2 million kg. Lehr, *Paardebel*, 346.

[37]The salvaged carillons of Appingedam, Brielle, Goes, St. Maartensdijk, and Tholen contained bells cast by 14 or more (four bells were anonymous) founders dating from the 17th, 18th, 19th, and 20th centuries.

[38]E.W. van Heuven, *Acoustical Measurements on Church-bells and Carillons* ('s-Gravenhage: Gebroeders Van Cleef, 1949).

André Lehr believes that Van Heuven should be seen as the founder of modern scientific campanology in the Netherlands.[39]

It was the combination of Arthur Simpson's findings with Van Heuven's modern scholarship, as well as modern technology, that enabled the Eijsbouts firm to make significant attainments in the art of bellfounding. It was the first foundry to abandon the use of tuning forks to measure the partials in favor of an electronic apparatus. Numerous historical carillons were in need of restoration following the war. Further research[40] by campanologist André Lehr, who joined Eijsbouts in 1949, complemented that foundry's success in restoring and extending Hemony carillons with new bells that match the timbre of the old bells. And whereas the Taylor bellfoundry continues to fail in its attempts to produce satisfactory treble bells, Eijsbouts devised a method of gradually changing the profiles as bells ascend in the treble range which results in perfectly tuned bells with a brilliant, robust timbre. This development enabled Eijsbouts both to correct the deficiencies of the existing treble range of the carillon and to extend the treble range an octave higher (to five octaves) than had been heretofore customary. Arthur Simpson, and hence Taylor, not only had a tendency to neglect the tuning of treble bells,[41] but had also given up on trying to voice the trebles such that they would not be overpowered by the bass:[42]

---

[39]André Lehr, "Acoustic research," *Forty-five years of Dutch Carillons; 1945-1990*, 134.

[40]André Lehr, *De klokkengieters François en Pieter Hemony* (Asten, 1959); and *Historische en muzikale aspekten van Hemony-beiaarden* (Amsterdam, 1960).

[41]Simpson, 7, no. 30 (October 1895), 194.

[42]Simpson, 10, no. 41 (September 1896), 152.

> And there are numberless cases of treble bells which, in order to make their leading tones *powerful* enough, have been made of a disproportionate thickness, with the inevitable result that their tones have been thrown very far out of due relation to each other. I fear that there is no help for this, and no effective method of dealing with such cases.

Unfortunately, Paul Taylor has not realized the importance of careful tuning in musical instruments: "When I see tables of vibrations per second worked out to the umpteenth decimal place I groan inwardly thinking that it is probably yet another "tone-deaf scientist" working his heart away!"[43]

TEMPERAMENTS

Until the 20th century, carillons were tuned in meantone temperament. The English founders adopted equal temperament. On the Continent, the merits of various tuning systems were debated by carillonneurs and carillon builders after WWII. Beside the meantone vs. equal temperament controversy, pleas were being made for the use of the Pythagorean system and just intonation. For some, the controversy was centered around the question of what repertory would be played on the instrument and which tuning system would serve it best. Others erroneously thought that the unique properties of carillon bells constituted grounds for deviation from modern practice in search of compensation for the inevitable clash inherent in the harmonic structure of carillon bells. Belgian campanologist Victor van Geyseghem spoke out for the Pythagorean system as early as 1932 at a carillon congress in Ottawa. A professor at the University of Ghent, G. van Esbroeck, shared this view and in 1952 convinced the city of Nieuwpoort (Belgium) and the Michiels bellfoundry of Tournai to construct a diachromatic carillon tuned using the Pythagorean system. Through a subsidy from the

---

[43]Paul Taylor, "The Designing and Making of Carillons," *Bulletin of the Guild of Carillonneurs in North America* 20, no. 1(May 1969), 17.

National Fund for Scientific Research, a 17-note scale was devised in which the diatonic tones are tempered, and a separate bell is provided for each of the chromatic tones, with no enharmonics (i.e. both C# and Db, D# and Eb, etc.)[44] No other diachromatic carillons were made, and very few others were tuned to the Pythagorean scale. The use of equal temperament in tuning carillon bells has been the general practice during the 20th century.

Willem Créman (1895-1970), organist and carillonneur of Zwolle, had promoted--even before WWII--a tuning principle which all three Dutch founders eventually adopted. Van Bergen applied it--at least partially--in their pre-war instruments. Eijsbouts began in 1962, and Petit & Fritsen in 1965. With this principle, the minor-third partial is tuned to harmonize with the fundamental of the bell a minor-third higher and with the hum-tone of the bell a minor-tenth higher.[45]

MAJOR-THIRD BELLS

The minor-third partial in bells has been a source of frustration ever since bells were assembled into carillons and used to render music based on tertian harmonies. Intervals normally associated with consonance and repose actually produce an element of disturbance and tension when played on bells. The solution would seem to be to raise the tierce partial a full half-tone, but this invariably distorts the other partials. In search of a solution, the Eijsbouts bellfoundry made a few carillons in the 1950's with bells having a neutral third partial, i.e. somewhere between a major- and a minor-third. It

---

[44]Kamiel Lefévere, "A New Development in Carillons; Nieuwpoort, Belgium"; and Arthur L. Bigelow, "The Nieuwpoort Carillon," *Bulletin of the Guild of Carillonneurs in North America* 8, no. 1 (January 1954), 22-34.

[45]Lehr, *Paardebel*, 356-57.

was not successful, as both major and minor tonalities sounded unpleasant. In the 1930's, sound physicist Dr. G.M. Giannini of the Curtis Institute of Music invented a device for damping the tierce partial note which was applied to the large bells in the carillons of the Riverside Church (NYC) and Mountain Lake Sanctuary (Lake Wales, FL), and soon went out of use.[46]

In the 1980's, the cooperative efforts of Dr. André Lehr, then director of the Royal Eijsbouts Bellfoundry, and the Mechanical Engineering Department at the University of Technology in Eindhoven, the Netherlands, under the direction of A.J.G. Schoofs, led to the development of a new bell profile that resulted in a new series of partials which includes a major-third instead of a minor-third.[47] A small experimental carillon comprising these major-third bells was constructed late in 1985.

In anticipation of this project and out of concern for its prospective success, a survey was conducted by psychoacoustics expert Adrian J.M. Houtsma at the Institute for Perception Research in Eindhoven. Using a digital computer, Houtsma filtered the minor-third partial out of a recording of Dutch bells and replaced it in turn with a major-third and a neutral-third. Musical compositions in both major and minor keys were synthesized, using all three types of bell sounds.

> His results indicated that, although carillonneurs leaned toward traditional minor third tuning, many other musicians preferred major bells for compositions in a major key and minor bells for compositions in a minor key. Untrained listeners tended to prefer the major third bells for both types of compositions, but the neutral third did not receive much

---

[46]Percival Price, "The Second North American Congress of Carillonneurs," *Bulletin of the Guild of Carillonneurs in North America* 25 (May 1975), 11.

[47]Partials in parentheses are weak. CC : C : E : G : (B^b) : c : (c) : e : g : (a^b) : (b^b) : c^1 Dr. André Lehr, *A Carillon with Major Bells* (Asten: Royal Eijsbouts Bellfoundry, 1986).

support from any of the groups.[48]

The first prototype of the major-third carillon was completed in May, 1986, and was presented to carillonneurs that summer at their World Congress in Ann Arbor, Michigan. This mobile carillon comprises 47 bells in four octaves. The bourdon, keyed to C, weighs 1300 pounds and sounds B^{b}; hence, this is a lightweight instrument which transposes up a minor-seventh. The first major-third carillon to be installed in a tower, another lightweight instrument (1676 lb. bourdon sounds G), is in Deinze, Belgium. An advisory committee of the Dutch Carillon Guild inspected this instrument and published and "official standpoint" in 1991 condemning the major-third carillon. A full weight (6,280 lb. bourdon sounds C), concert pitch, 52-bell, major-third instrument was installed at the Crystal Cathedral in Garden Grove, California in 1990. Approximately ten chimes and one carillon comprising major-third bells--all played by automatic mechanisms--were installed in the Netherlands, Belgium, Germany and Mexico.

Carillonneurs, who are accustomed to deciphering the confusing sound of a minor-third carillon, have generally not been willing to accept the sound of the major-third carillon whose confusion stems from another source. A 1992 thesis written by P. Kroon at the University of Technology in Eindhoven addresses the properties of the major-third bell which generally disappoint carillonneurs. Kroon purports that the problem lies not in the major-third partial, but in the bells' characteristics of attack, resonance, and decay. She has produced theoretical conclusions which have yet to be

---

[48]Thomas D. Rossing, "Major-third Bells," *Carillon News* no. 36 (Fall 1986), 6.

tested in practice.[49] With the retirement of André Lehr from the Eijsbouts firm, the further development of the major-third carillon has come to a halt--at least for the time being. From the greater perspective of history, this may be seen as the first step in the evolution of a new type of tower instrument. This can certainly be regarded as one of the most significant technical developments of the 20th century in the art of bellfounding.

The State University of Utrecht conferred an Honorary Doctorate of Letters on André Lehr in 1986 for his great achievements as bellfounder, campanologist and historian as evidenced by the results of his professional activities as bellfounder, his many books and other publications, his undertakings as president of the Dutch Carillon Guild's Historical Commission, his roles as cofounder and curator of the National Carillon Museum, co-founder of the Athanasius Kircher Foundation for Research on Automatic Musical Instruments and Campanology, and guest lecturer at the Dutch and Belgian carillon schools. Prior to this, he had been knighted in the Order of Orange-Nassau in 1982, received the medal of honor of the Association for Netherlandic Music History in 1986 and was awarded the first Brabant Museum medal in 1987.[50]

CONSOLE STANDARDIZATION

As early as the Congress for Carillon Art in 1922, some carillonneurs were aware of the lack of standardized measurements in the components of carillon consoles. Recognizing the desirability of uniformity, Karel de Mette, in his speech at the congress

---

[49]Martijn van Calmthout, "Supercomputer ontwerpt vrolijk carillon," *De Volkskrant* (Amsterdam), 25 April 1992.

[50]Romke de Waard, "Carillon Art," *Forty-five Years of Dutch Carillons; 1945-1990*, 39.

concerning technical improvements in carillon building, made a plea for standardized measurements in all carillon consoles. Furthermore, he pleaded for concave, radiating pedalboards.[51] At the conclusion of the congress it was resolved that a second congress would be held at which, among other topics, the "bouw en toepassing van het eenvormig, het standaard-beiaardklavier" (construction and application of the uniform, the standard carillon console) would be discussed.[52] Unfortunately, six decades passed before any consensus was reached, despite countless meetings, surveys, advisory commissions and committees. Finally, in 1983 an agreement was made in Louvain for a "North European Standard" which has been signed by representatives of the Belgian, Dutch, Danish and French carillon guilds as well as the World Carillon Federation.[53] It represents a compromise between European national standards rather than an optimal design based on functional concerns; it deviates sharply from the developments incorporated into American console design during the same six decades.[54]

POLLUTION

It had been generally accepted, given the manner of tuning bells, that once tuned, a bell would not go out of tune of its own accord. André Lehr, however, discovered that air pollution was having a detrimental effect on bells in the Low Countries. He blames the coal furnaces that were used to heat nearly all homes there until the mid-1960's

---

[51]Karel de Mette, "De beiaardtechniek in verband met de beiaardkunst," *Beiaardkunst; Handelingen van het Eerste Congres, Mechelen, 1922* (Mechelen: L. Godenne, 1922), 76, 77.

[52]Ibid., 147.

[53]Loek Boogert, "Institutions," *Forty-five Years of Dutch Carillons; 1945-1990*, 55.

[54]See page 101 for further discussion of the European and American console standards.

when the switch to natural gas halted the corrosion of bells. He explains that pollutants such as sulfur dioxide along with the humid atmosphere promoted the chemical reaction which formed a layer of green patina on bronze bells. In most copper and bronze objects, this thin layer would serve to protect the metal from further corrosion. The bells' vibrations caused the patina to fall off however, eventually leading to thinner walls and lower frequencies. The partials did not change proportionately, nor did the pitch fall a proportionate amount over the range of the carillon; hence both the internal and external tuning of the bells were adversely affected. The sound was also noticeably dampened by the patina.[55]

CARILLON GUILDS

Carillon enthusiasts in the Low Countries organized themselves early in the 20th century. The Nederlandsche Klokken- en Orgelraad (NKO)(Dutch Organ and Bell Advisory Committee) was founded in 1917 as a subcommission of the Nederlandsche Oudheidkundige Bond (Dutch Antiquities Society). The first meeting of the Algemeene Klokkenspel-Vereniging (General Carillon Guild) was in 1918 in Utrecht. Two chapters were planned: North and South, which rapidly divided into two independent organizations. The southern group identified itself as Onze Beiaarden/Nos Carillons in 1921, eventually becoming the Oud-Leerlingen Bond (Old Students' Guild) of the Belgian Carillon School, which is now the Belgische Beiaardiers Gilde (Belgian Carillonneurs' Guild). The northern group changed its name to the Nederlandsche Klokkenspel-Vereniging (Dutch Carillon Guild) in 1927.

---

[55]André Lehr, "Restoration of historic carillons," *Forty-five Years of Dutch Carillons*, 81.

THE DUTCH SCHOOL

Ferdinand Timmermans (1891-1967), the first Dutchman to graduate from the Belgian Carillon School, began a carillon class at the Rotterdam Conservatory in 1927. In 1948 a Carillon Society was formed in the city of Amersfoort, the Netherlands, with the intent of establishing a carillon school. The school opened officially in 1953, and Leendert (Leen) 't Hart (1920-1992), another graduate of the Mechlin School, was appointed director. Despite his instruction in the distinctive Flemish tradition, 't Hart sought to develop his own personal style of composition and performance. The Dutch Carillon School became the vehicle for the promotion of a new national style, free of the romanticism and tremolos of the Flemish school. He wrote a book on campanology, a carillon playing method, and a guide to improvisation. 't Hart became a prolific composer, arranger and transcriber of music for the carillon. Of greater importance, however, than his own musical works is the organizational impetus he provided for the propagation of a Dutch carillon style.

THE ROLE OF CARILLON MUSIC

After Jef Denyn's example, the practice of playing scheduled, formal concerts became relatively widespread by the 1920's. Nevertheless, the carillon remained essentialy a folk instrument. Despite the concerts, the primary function of carillonneurs in the Low Countries is still to provide music during the weekly markets. This is reflected in the Dutch language, in that there is a separate word, *bespeling*, used to refer to informal performances, beside the word *concert* for formal concerts or recitals. The instrument's folkloric nature is evident in its literature as well. Relatively few carillon compositions came about in the first decades of this century, as improvisation was the modus operandi. Folk music was a primary source of inspiration

for these improvisations, and has continued to form the basis of a large portion of 20th-century European carillon compositions.

Dutch carillonneurs sought autonomy not only by opening their own school and promoting a new style, but also by exploiting the Dutch national song culture that is distinct from the Flemish folk tradition. This is most evident in the use of songs from the *Neder-landtsche gedenck-clanck*. Dutch historian, lawyer, poet, and musician Adriaan Valerius made this collection which was published in Haarlem in 1626. It tells the history of the Dutch and Spanish wars from 1555-1625, includes 76 popular songs, and has become a popular Dutch patriotic songbook.

Staf Nees (1901-65), the second director of the Belgian Carillon School, zealously promoted the expansion of the carillon repertory and, in 1950, established an annual composition competition. Both the Belgian and Dutch carillon guilds, and both countries' schools, publish carillon music. The Donemus foundation (Documentation Center for Dutch Music), which was established in 1947 to promote Dutch music, has published numerous contemporary carillon compositions.

Notable Belgian composers include: Nees, Arthur Meulemans (1884-1966), Jos Lerinckx (b.1920), Jef Rottiers (1904-85), Flor Peeters (1903-86), Jef van Hoof (1886-1959), and Eugeen Uten (b.1919). In the Netherlands: Henk Badings (1907-87), Benoît J. Franssen (1893-1978), Leen 't Hart (1920-92), Albert de Klerk (b.1917), Wim Franken (b.1922), Gerard Boedijn (1893-1972), Wouter Paap (1908-81), and Harold King (1895-1984). Meulemans, Peeters, Van Hoof, Badings, De Klerk, Boedijn, and King were not carillonneurs and, although their writing is occasionally not as idiomatic as desirable, they brought a fresh perspective and generally a higher quality of composition to the repertory.

With the development of a respectable repertory, the carillon has begun to

garner a reputation as a worthy concert instrument. Mechlin has continued to be a world center of carillon culture, and is referred to as the mecca of the carillon art. It became apparent, however, that the St. Rombout's carillon--which had paved the way for the renaissance of the carillon art--was no longer a state of the art instrument. The combination of bells by twelve different founders, dating from as early as 1480 and as late as 1952, precludes the possibility of it having a homogeneous sound. The meantone tuning and the lack of precise tuning in general make the musical results intolerable to a trained ear, and especially unacceptable in light of the advancements made in founding and tuning bells during the 20th century. Therefore, a new carillon of 49 bells was installed in the St. Rombout's tower by the Royal Eijsbouts Bellfoundry in 1981. Due to its historic significance, the old carillon was kept and moved to a different level in the tower.

In the interest of providing a strong stimulus for the recognition of the carillon art as an artistic expression of high quality, the Royal Belgian Carillon School instituted a triennial international carillon competition in 1987, under the patronage of Her Majesty Queen Fabiola. It is significant that all repertory for the competition must be original carillon music.

INTERNATIONAL GROWTH

The carillon art gradually spread beyond the borders of the Low Countries. Only in North America has it flourished to any comparable degree. A carillon school has opened in Douai, France; Scandinavians study at the Løgumkloster Church Music School in Denmark. Carillon guilds have formed in most countries where there are many instruments: Denmark, Great Britain, France, Germany, Australia, and Switzerland. Seven international congresses have been held since the first in 1922 in Mechlin: 1925

in 's-Hertogenbosch, 1972 in Rotterdam, 1974 in Douai, 1978 in Amersfoort and Utrecht, 1982 in Løgumkloster, 1986 in Ann Arbor, and 1990 in Zutphen (the Netherlands). A World Carillon Federation was formed at the Douai meeting.

VI. THE BLOSSOMING OF THE CARILLON ART IN AMERICA

EARLY MANIFESTATIONS

The British simply could not have been comfortable in any new England without the ubiquitous tolling of bells. Long before our nation was founded, a collection was taken up in England to furnish the North American mission with a peal[1] of eight bells. Cast by Abel Rudhall of Gloucester, England, it was hung in the tower of Christ Church in Boston in 1744.[2] Although the British tradition of ringing prevailed in the New World, it was only a matter of time before this and other sets of bells were rigged such that melodies could be played by a single performer. An apparatus for chiming was added to the Christ Church peal in 1810. In 1754, two "full" peals of eight bells were installed in Philadelphia, at St. Peter's[3] and at Christ Church, the latter cast by Whitechapel in London as a present from Queen Anne.[4] Another eight-bell peal followed ten years later at St. Michael's in Charleston, South Carolina, and a "partial" peal of four bells was installed at Trinity Church in New York City in 1797.

---

[1]A peal is a set of tolling bells, and sometimes referred to as a ring. A tolling bell is mounted to be swung. A swinging bell produces more sound than a carillon bell, which is hung dead.

[2]Ralph Adams Cram, "Christ Church Bells," in *Bells: Their History and Romance*, ed. Gouverneur [Merion] Morrison (Santa Barbara: J.F. Rowny Press, 1932), 232.

[3]William De Turk, "Meneely Bells: An American Heritage," *Bulletin of the Guild of Carillonneurs in North America* 27 (April 1978), 31.

[4]"Littell's Living Age," 44, p.311 (1855) in Morrison, 236.

THE CHIME

American founders had begun casting bells early in the 18th century. The Boston Copper Company produced the first known chime in 1825, eight bells with a 2000 pound bourdon. The next two known American-made chimes were both on display at the 1850 Mechanics' Fair in Boston: the 11-bell chime based on a 3000-pound D# made by Henry N. Hooper & Co. of Boston which won a silver medal at that fair,[5] and a nine-bell chime made by the Meneely foundry of Watervliet, New York, which won a gold medal at the fair of The American Institute in New York City. These three instruments mark the beginning of a new American bell tradition which flourished for one hundred years. *Harper's Monthly* reported in 1876: "Full and partial chimes are now to be found in all parts of the country."[6]

The chime developed as a distinctly American phenomenon. The bells were not normally controlled by a clock mechanism, as their European counterparts had been, but rather solely from a manually operated chimestand. Whereas the carillon console has two rows of manually operated batons, the American chimestand--manipulating a basically diatonic series of bells--has only one row of levers. The levers are much larger than carillon keyboard batons, and rather than being played like a carillon--with the pinky-side of a closed fist--they are grasped with an open hand. The levers resemble water pump handles, and are depressed approximately one foot, in contrast with the two- to three-inch keyfall in a carillon. The majority of American chimes in this period had à range of ten bells covering one diatonic octave with two chromatic tones: 1 : 2 : 3 : 4 : 4# : 5 : 6 : 7^{b} : 7 : 8, although nine-, eleven-, and twelve-bell

---

[5]Percival Price, *Bells and Man*, 205.

[6]L. Elsinore Springer, *That Vanishing Sound* (New York: Crown Publishers, Inc., 1976), 169.

chimes extending beyond one octave were not uncommon. Occasionally there were one or two pedals--which pulled manual levers down--that the standing chimemaster would operate with the left foot. The vast majority of early American chimes were installed in Protestant--mostly Episcopal--churches, and were used to play Protestant hymn melodies. A chime was a symbol of outward affluence, played not as much for praising God as for attracting people in the free market of competing churches.[7] At least 381 chimes were made by American bellfounders, primarily between 1850 and 1940. Three foundries made the most significant contributions: Meneely of Watervliet, 161 chimes; Meneely of Troy, 135 chimes; and McShane of Baltimore, 73 chimes.

The tuning of the bells was not precise, and some founders made no attempt to tune their bells. The Meneely firm of Troy, New York, claimed that virgin castings sound the best.[8] Founders commonly made several bells for each note of a chime, choosing the best for use in a series and selling the others individually. The following account demonstrates the shortcomings of the tuning as well as the primitive nature of the action:

> We found the familiar clavier, which was composed of eight or ten hickory levers, each the size of a shovel handle. Hickory rods an inch square led to the belfry. To ring the bells we had to yank these levers down fully a foot from their normal position. In the belfry were straps, as heavy as the heaviest team harness, running over wooden pulleys, and connecting the vertical rods to the clappers of the bells. Very slowly, and with almost agonizing muscular effort, we picked out the melody of *Sun of My Soul*, *Duke Street* or *Eventide*, annoying all the neighbors for a mile in every direction, because we invariably substituted an F-natural for an F-sharp, for the simple reason that there was no F-sharp to play. Or, perhaps we would dash off what we fondly believed to be a demonstration of true English change-ringing. It was unmercifully slow, because each lever had to be hauled down at least twelve inches, and the transmitting mechanism was clumsy beyond words. The fact that the treble, or

---

[7]Price, *Bells and Man*, 206.

[8]Ibid., 208.

smallest bell, was almost half a tone too sharp, and the G bell sounded as though it were badly cracked, did not dampen your ardor in the least, or mine either.[9]

AMERICA'S FIRST CARILLONS

The brothers Jean-Baptiste-Amédée Bollée (born 1812) and Ernest-Sylvain Bollée (born 1814) were itinerent bellfounders who eventually set up foundries in Orléans (Jean-Baptiste) and Le Mans (Ernest), France. Ernest made two carillons in the 1860's that were unusually large for that period: 56 bells for Châlons-sur-Marne, and 50 for Châtellerault.[10] In 1856, however it was a 23-bell carillon that Ernest sent to America at the request of missionaries from Le Mans who were founding Notre Dame University in Indiana.[11] It was used primarily in its capacity as a *carillon à cylindre.* Bollée had set up the weight-operated metal cylinder with three songs for automatic playing: *Le grand air Tyrolien*, *La chasse du Jeanne Henry*, and *La Tyrolienne de Guillaume Tell*. Although there was not a conventional carillon console, it was playable manually. A short handle protruded from each cylinder mechanism trigger, and knobs on the ends of the handles indicated the letter names of the notes.[12] The carillon spanned two chromatic octaves, from G to g^1, with the exception of the two lowest semitones. The

---

[9]F.R. Webber, "The Carillon Invades America," *American Mercury* (May 1933), 87, quoted in William De Turk, "Meneely Bells," 41.

[10]Prosper Verheyden, 63.

[11]Springer, 182.

[12]James R. Lawson, "North America's First Carillon," *Bulletin* 35 (January 1986), 20.

handles indicated the notes as C, D, E, F, then chromatic through C.[13] Although Bigelow says that it was "seldom played by hand,"[14] Price reports that advertised recitals were played on this carillon.[15] Typifying the decadence of the 19th century, the tuning of these bells is quite poor--so poor that many 20th-century carillonneurs refuse to acknowledge this instrument as America's first carillon. Nonetheless, Pope John Paul II proclaimed:

> We know that the pleasant harmony of America's oldest carillon repeatedly resounds from Sacred Heart. We hope that its sound will not only calm and gladden human hearts, but that it will also call those who hear it to faith and Christian truth and that it will stir their spirits.[16]

A Catholic bishop from Buffalo was apparently able to overlook the Notre Dame instrument's deficiencies as well, as he arranged for the installation of a 43-bell Bollée carillon in the Roman Cathedral of St. Joseph in Buffalo. Cast in 1866, the carillon was displayed at the Paris Exhibition the following year before being shipped to America.

America's third carillon was cast in 1880 by the Louvain founder Severinus van Aerschodt. The 25 bells were tested at Louvain in 1883 by Sir John Stainer who was Her Majesty's Inspector of Music, and organist of St. Paul's Cathedral, London. He approved of their beautiful tone and fine tuning. The carillon was installed in the Church of the Holy Trinity in Philadelphia in 1883 and was played regularly from a console

---

[13]Arthur Bigelow, *Carillon; An Account of the Class of 1892 bells at Princeton with Notes on Bells and Carillons in General* (Princeton: Princeton University Press, 1948), 78.

[14]Ibid.

[15]Price, *Bells and Man*, 202.

[16]Pope John Paul II, Vatican document, 17 January 1992.

with batons and pedals. Charles Bancroft was carillonneur for 45 years.[17]

In 1891, the Meneely foundry of Troy installed a 19-bell chime in St. Patrick's Cathedral in New York City.

The Stuckstede bellfoundry of St. Louis advertised its readiness to fabricate a fully chromatic chime of 22 bells and claimed to have invented the carillon in their catalog of 1895:

> With the aid of our Carilloner [sic] who is an expert on chime playing, we have invented a mechanical device called "The carillon" illustrated on p. 83. There are many advantages derived from our carillon, although the method of playing is the same.
>
> Both our apparatuses are supplied with extra pedals, enabling the carilloner to play with both hands and feet and are so arranged that he is capable to strike 3 and 4 bells at once, producing triads and full chords, with great advantage.[18]

Although a chimestand is shown in the page 83 illustration, the inclusion of pedals is significant in that it represents the first attempt by an American bellfounder to make a harmonic bell instrument as opposed to a melodic bell instrument--i.e. a carillon as opposed to a chime.

Andrew Meneely (Watervliet) was aware of Lord Rayleigh's 1890 study of bell tones. In his catalog of 1912 he states:

> Between 1890 and 1895 I made the important discovery that the tone elements of bells could be accurately and absolutely determined with the aid of specially designed instruments, and that such bells, when intended for musical sets (chimes or peals), could be musically harmonized in themselves and with each other by mechanical processes

---

[17]Remy Müller, "The Philadelphia Carillons," *Bulletin* 11, no. 1 (April 1958), 17.

[18]George Matthew, Jr., "Bellfounding in America," Paper presented at the annual meeting of the Guild of Carillonneurs, Washington, D.C., 24-27 June 1990 (Washington, D.C.: Washington National Cathedral, 1990), 56.

and methods of testing, thus obtaining results never attained before.[19]

The "specially designed instruments" were 12 tuning forks purchased from Koenig of Paris in 1894.[20] Although Meneely improved his ability to tune bells, his results were not comparable to those achieved by John Taylor with the help of Arthur Simpson.

In 1899, the Taylor bellfoundry shipped a 10-bell chime to the Iowa State Agricultural College (now Iowa State University) in Ames, Iowa. This was the first chime tuned according to the principles of Canon Simpson. Numerous peals had been cast and tuned since 1896 when Taylor began using a lathe and Simpson's principles. A 1956 letter from Frank Godfrey, works manager and carillon designer for John Taylor & Co. from 1929 to 1966, attests to the quality of those bells: "The excellence of John Taylor's tuning even in those far off days is shown by the way they merge into the bells added later [in 1929 and 1956]. Even by our present day standards your old bells are accurately tuned."[21]

The Paccard bellfoundry cast 26 bells in 1900 which were installed the following year in the Immaculate Conception Chapel at St. Vincent's Seminary (now known as Miraculous Medal Shrine) in Germantown, Pennsylvania. The four largest bells were mounted to be swung, and the remaining 22 were connected to a Maisonnave keyboard. This keyboard was one of several unsuccessful inventions of the late 19th century designed to enable the carillonneur--or any keyboardist--to play from a piano-type keyboard, with more ease than the traditional carillon keyboard offers. With Canon Maisonnave's keyboard, the seated player pumped harmonium-type pedals which turned

---

[19]"Meneely & Company; Book on Bells," (Watervliet, West Troy, NY, 1912).

[20]De Turk, *Bulletin* 27, 47.

[21]Ira Schroeder, "A History of the Edgar W. and Margaret MacDonald Stanton Memorial Carillon," *Bulletin* 10, no. 1 (June 1957), 3.

a cylinder. Each key released a spring which caused a hammer to strike a bell. The turning cylinder served to restore tension to the spring. Other Maisonnave keyboards had been installed in Buglose and Pontmain, France.[22]

By the turn of the century, the evolution of the carillon in America was moving slowly through various stages. American founders had progressed from single tolling bells, capitalized on the chime, and were contemplating its expansion into a harmonic instrument, hindered presumably only by tuning limitations. The French, having no allegiance to the *carillon de Flandre* tradition, being led astray by aspiring inventors, and being plagued by a similar ignorance of tuning methods, had sent several sets of carillon bells to the New World that were fitted with inadequate mechanical contrivances which severely limited their ability to contribute to the development of the carillon art. The only Flemish contribution--a true two-octave carillon--had been built by Severinus van Aerschodt who, alas, died in 1885. The British, whose peals were occasionally corrupted by Americans into melodic instruments, were destined to take the lead in carillon building for America, for it was in England that the greatest strides in tuning had been made by the turn of the century, and it was in London at a meeting of the Royal Society of Arts that Jef Denyn presented his lecture *Technique et mécanisme du carillon*. With superior bells and replete technical knowledge, the English founders were prepared to take the lead in carillon building at the close of World War I.

WILLIAM GORHAM RICE

"I am an American much interested in carillons, having made for two years some study of them. Monsieur J. Denyn, to whom I had letters and whom I expect to see soon

---

[22]Verheyden, 101.

has written me advising me to call upon you," wrote William Gorham Rice (1856-1945) in 1913 on a postcard to Prosper Verheyden.[23] Born in Albany, Rice was a civil service commissioner for both the state of New York and the United States, and the secretary for two New York governors. His wife, Harriet Langdon Pruyn, hailed from a prominent family of Dutch heritage. Rice's study of the carillon was inspired by his wife, as a means of occupying his time and interest during their visits to her friends and relatives in Belgium and Holland.[24] She was the first to refer to belfries with carillons as "singing towers." After visiting dozens of carillonneurs and their towers, and after doing research in several European libraries, Rice wrote *Carillons of Belgium and Holland; Tower Music in the Low Countries*.[25] It was so successful that a second edition appeared in 1915 as well as a limited special gift edition. This was followed two years later by *The Carillon in Literature*.[26]

Rice was, in effect, the ambassador of the carillon to the United States. His books, as well as the magazine and newspaper articles he wrote for publications such as *National Geographic*, *The Musical Quarterly*, and *Art and Archeology*, presented the notion of this little-known, Netherlandic phenomenon to Americans. But he did not stop there. With hundreds of letters, Rice urged American institutions to install carillons.

---

[23]*Jubileumboek 1922-1972*, 12.

[24]William De Turk, "William Gorham Rice and the North American Carillon Movement," *Bulletin of the Guild of Carillonneurs in North America* 29 (1990), 14-15.

[25]William Gorham Rice, *Carillons of Belgium and Holland; Tower Music in the Low Countries* (New York: John Lane Co., 1914; London: John Lane, Bodley Head, 1914; Toronto: Bell & Cockburn, 1914).

[26]William Gorham Rice, *The Carillon in Literature; A Collection from Various Authors with Some Notes on the Carillon Art* (New York: John Lane Co., 1916; London: John Lane, Bodley Head, 1916).

He created the "Carillon League" to promote an appreciation of carillon music. The Reverend Milo Gates, Dean of the Cathedral of St. John the Divine in New York was the president, and members periodically received leaflets describing the growth of the carillon movement. Willy Godenne wrote: "Entirely through personal concern and with no commercial interest, this man generated an affection for the carillon in great dignitaries such as Belgium's Cardinal Mercier and American Presidents Hoover and Roosevelt."[27] President Woodrow Wilson visited Mechlin in 1919 with American senators and other dignitaries to attend one of Jef Denyn's recitals. It was under the auspices of Herbert Hoover that funding was sent for the foundation of the Belgian Carillon School in 1922. Carillon recital audiences at Cohasset, Massachusetts included President and Mrs. Calvin Coolidge, who just a few years later dedicated the Mountain Lake Sanctuary and Singing Tower (now known as Bok Tower Gardens) in Lake Wales, Florida. Rice's acquaintance John D. Rockefeller, Jr. contributed not only to this endeavor, but underwrote the construction of two of the largest carillons in the world: for the Park Avenue Baptist Church in New York City (now the Riverside Church) and the University of Chicago.

A NEW AND PROSPEROUS ERA

With the English founders primed for production and the American market eager to commission, the impending influx of carillons on this continent began. The first two instruments arrived in America in 1922. One was for the Church of Our Lady of Good Voyage, the Portuguese fishermen's parish, in Gloucester, Massachusetts. William Gorham Rice took an interest in the procurement of this instrument. He wrote: "[I] in

---

[27]Willy Godenne, "An Appreciation of William Gorham Rice," *Bulletin* 29 (January 1980), 37.

November 1920, unaccompanied, made the then somewhat difficult ascent of the tower, through its interior man-holes, and recorded the measurements and survey which showed the possibility of placing several octaves of attuned bells in this height, overlooking the Atlantic."[28] In 1921, the Taylor bellfoundry cast 25 bells which were installed the following year with a transmission system consisting of roller bars and tumblers. Soon after its inauguration a special concert was given for John D. Rockefeller, Jr. who came by yacht from his summer residence in Seal Cove, Maine. Rockefeller contributed $500 toward the purchase of two additional bass bells. Within two years, these two and four trebles were added, giving the carillon a 2 1/2 octave range. Correspondence between Rice and Piatt Andrew implies that the original console had no pedals and that a new keyboard with pedals was added when the new bells were installed.[29]

The other 1922 instrument was built by the Gillett & Johnston foundry for the Metropolitan Methodist Church in Toronto, Ontario, Canada. A console with pedals was installed for playing the 23 bells, as well as a roll player and an electric, piano-type keyboard. In this case, it was a church member who wanted to give the church a present of some bells in memory of his wife. The organist/choirmaster, Dr. Herbert A. Fricker, was sent to England to select bells. The inscription on the bourdon begins: "This chime of 23 bells . . . . . "

So, the Church of Our Lady of Good Voyage bought a carillon with no pedals, and the Metropolitan Church thought it was buying a chime. That these instruments were

---

[28]William Gorham Rice, *Carillon Music and Singing Towers of the Old World and the New* (London: John Lane The Bodley Head Ltd., 1930) quoted in Martin A. Gilman, "Our Lady of Good Voyage Church Carillon, Gloucester 1922-1972," *Bulletin* 23 (November 1972), 37-38.

[29]Martin A. Gilman, "Voices from the Carillon's Past," *Bulletin* 27 (April 1978), 84.

seen as mere extensions of the American chime gives additional credence to the theory that the carillon was not simply imported from Europe, but was following a course of evolution in America not wholly unlike the one it had followed centuries earlier in Europe. These two instruments, however, represent an enormous stride in that evolution. Both were functional as harmonic bell instruments, especially after the Gloucester carillon was fitted with a pedalboard. And, with the exception of the Ames chime, both were tuned with considerably greater precision than any of the American-, French-, Flemish-, or English-made bells on this continent at that time.

The installation of these two instruments, coupled with Rice's efforts to ensure that the Gloucester instrument was indeed a *carillon de Flandre*, and his efforts in general to promote this Flemish art, resulted in a major turning point in the history of the carillon. From this point forward, the carillon art flourished in America. Two other factors weighed heavily in this burgeoning. First, America was in the midst of a very prosperous period, making the acquisition of large, expensive instruments such as carillons and organs more feasible than ever. Second, in the same year that the two small English carillons were installed in America--1922--the Belgian Carillon School opened its doors. Numerous Americans were to be educated there, and the first graduate of that school, the Belgian Kamiel Lefévere, was imported for summer recital series in Cohasset and Gloucester which lasted until the Great Depression brought their demise a decade later. A letter from Piatt Andrew to Cardinal O'Connell explains this development:

> I was anxious to get him here, because I have long been interested in the little Church of Our Lady of Good Voyage, and have been sorry that its carillon has never been properly played. I had thought that if enough interest were aroused this year, it might be arranged each summer, either by popular subscription or by civic appropriation, to employ one after another of the great Belgian carillonneurs to play a series of summer evening concerts. So a few of us clubbed together and induced Lefevre [sic] to come here to give the same concerts that he and Denyn give on Monday nights throughout the summer from the tower of St.

Rombold's.[30]

The concerts drew immense crowds; literally thousands of people flocked to these coastal towns.

Every year, for the next fifteen years, carillons built by the Taylor and Gillett & Johnston foundries were installed in America, for a total of 40. Half of these had a two- to 2 1/2-octave range. Six, beginning with the 35-bell carillon for St. Peter's Episcopal Church in Morristown, New Jersey in 1924, had at least a three-octave range; and fourteen, beginning with the 53-bell carillon for the Park Avenue Baptist Church in New York City in 1925, had a range of four octaves or more. In insisting that this New York carillon be the largest in the world, John D. Rockefeller, Jr. set two important precedents. First, the four-octave range became the most standard size, both in America and in Europe. Also, the bourdon of this carillon was a 20,510 pound E_1, keyed to G_1. The extension of the bass range of the carillon to G_1 on the keyboard (in contrast to the traditional Dutch range to C and the Flemish range to B^b_1) became the trademark of English/American carillons, and the basis for a new school of carillon composition.

In the meantime, the number of bells in chimes made by American founders increased, becoming, in effect, carillons[31]:

1914	Toronto	Timothy Eaton Mem. Ch.	21 b.	Warner
1925	New York City	Grace Episcopal Church	20 b.	Meneely (T)[32]
1927	Winchester, MA	First Unitarian Church	21 b.	Meneely (W)
1928	Danbury, CT	St. James' Episcopal Ch.	25 b.	Meneely (W)

[30]Gilman, *Bulletin* 23 (November 1972), 40-41.

[31]Statistics taken from: William De Turk, "William Gorham Rice and the North American Carillon Movement," *Bulletin* 39 (1990), 16.

[32]"T" refers to Meneely of Troy, "W" to Meneely of Watervliet.

1929	Philadelphia	Trinity Evan. & Ref. Ch.	25 b.	Meneely (W)
1931	Storrs, CT	Univ. of Connecticut	31 b.	Meneely (W)
1931	Valley Forge, PA	Washington Mem. Chapel	36 b.[33]	Meneely (W)
1936	Wilmington, DE	Alfred I. du Pont Estate	30 b.	Meneely (W)
1942	Dayton, OH	Edward Deeds Memorial	23 b.	Meneely (T)

Meneely provided the Danbury, Philadelphia, Storrs, and Valley Forge carillons with consoles designed according to Jef Denyn's principles. Meneely purchased yet newer tuning forks from England in 1926 and did its first 5-point tuning (i.e. all five partials) on a chime for Palm Beach, California in 1927.[34] Despite its continuing progress in this regard, the Meneely foundry could not match the quality of the English founders. With other factors working against them as well, both Meneely firms were out of business by 1952.

World War II brought the second era of the carillon's evolution in America to a close. About this era, William Gorham Rice concluded: "The phenomenal development of the carillon movement in America is one of the most astonishing and gratifying results of the dissemination of the history of the Old World instrument."[35]

THE GUILD OF CARILLONNEURS IN NORTH AMERICA

Dr. Remsen B. Ogilby, president of Trinity College in Hartford, Connecticut, invited all carillonneurs in the United States and Canada, and other interested parties, to meet with him in order to discuss matters of common interest. This 1934 gathering in

---

[33]The carillon originated in a chime of fourteen bells, installed in 1926, with the intention of making it a carillon of 49 bells with a compass of four completely chromatic octaves. Robert Donnell, "The Carillons of North America," *Bulletin* 2, no. 2 (April 1948), 24.

[34]Richard Watson, "Tuning Talents of the Meneely Firms," quoted in James B. Slater, "The 1980 GCNA Congress," *Bulletin* 30 (January 1981), 6.

[35]Willy Godenne, "An Appreciation of William Gorham Rice," *Bulletin* 29 (January 1980), 42.

Hartford became known as the First Congress of Carillonneurs in North America. About 35 persons attended, and they resolved to meet again. At the second Congress two years later in Ottawa, the Guild of Carillonneurs in North America was founded with the following objectives:

> 1. To foster carillon music in North America.
> 2. To exchange between carillonneurs, who usually are handicapped by a distance one from another, information useful in developing and popularizing their art.
> 3. To give carillonneurs, and the public, the advantage of hearing different styles of playing.
> 4. To find out the most practical layout of the keyboard, and the most useful conventions of musical notation, and to recommend their standardization.
> 5. To circulate music for the carillon, to encourage original composition, and to be available for advice on arranging.
> 6. To stimulate the use of the carillon in places where instruments and sites are good, and to advise on locations so as to avoid the establishment of carillons which cannot be used, or cannot be heard enough to justify their installation.
> 7. To stand as an anonymous body qualified to advise on all questions concerning the carillon.
> 8. To maintain contacts for those interested in the carillon, with carillon organizations, carillonneurs, makers, and directors of carillons throughout the world.[36]

Many of these objectives have been addressed. In 1961, the Guild took a major step in fulfilling the first objective by becoming a publisher of carillon music. In more recent years, the Guild has sponsored carillon composition competitions and has commissioned major composers to write works for carillon. With regard to the second objective, the *Bulletin* of the Guild has been published since 1940, and a newsletter[37] was begun in 1969. The third objective is met through the congresses of the Guild, which have been annual events since 1946. Considerable attention was given to the

---

[36] *Bulletin* 1 (October 1940), 7-8.

[37] *Randschriften* 1969-79; *Carillon News* 1979-present.

dimensions of the playing console during the 1960's, and the Guild adopted a set of standards in 1970, which were revised in 1981. The American console differs notably from the European model, mostly due to the modifications employed by the English builders in the 1920's. These include a concave, radiating pedalboard, shifted to the left, extended upwards to complete two octaves (C to c^1), and extended downwards in the instance of larger carillons with an extended bass range. The keyfall in both manual and pedal keys was reduced.

In its Articles of Incorporation, the Guild defines the word "carillon":

> A Carillon is a musical instrument consisting of at least two octaves of carillon bells arranged in chromatic series and played from a keyboard permitting control of expression through variation of touch. A carillon bell is a cast bronze cup-shaped bell whose partial tones are in such harmonious relationship to each other as to permit many such bells to be sounded together in varied chords with harmonious and concordant effect.[38]

In order to promote a higher level of performance in the absence of an organized educational institution, the Guild established an examination process for its members in 1947. The membership was divided into two classes, "carillonneur members" and "associate members," and later added the "student member" classification.

POST-WW II

After the Second World War, the three Dutch founders entered the American market. Gillett & Johnston ceased production in the early 1950's. Taylor, Eijsbouts, Petit & Fritsen, and Paccard made, and continue to make, large, significant instruments. There are now 155 carillons in North America, plus 56 instruments which are not

---

[38]"Documents relating to the Incorporation of the Guild," *Bulletin* 15, no. 1 (December 1963): 23.

playable from a carillon console.

A selective sampling of carillons installed since WWII[39]:

1951	Gillett & Johnston	51 b.	Culver Academy	Culver, IN
1951	Taylor	53 b.	University of Kansas	Lawrence, KS
1955	Paccard	56 b.	St. Joseph's Shrine	Montréal, Québec
1960	Petit & Fritsen	77 b.	Kirk in the Hills	Bloomfield Hills, MI
1963	Taylor	53 b.	National Cathedral	Washington, D.C.
1966	Paccard	48 b.	University of California	Riverside, CA
1970	Van Bergen	49 b.	Concordia Seminary	St. Louis, MO
1971	Eijsbouts	61 b.	Indiana University	Bloomington, IN
1982	Eijsbouts	49 b.	Church of the Ascension	Clearwater, FL
1988	Petit & Fritsen	50 b.	Carillon Historical Park	Dayton, OH
1988	Paccard	65 b.	Downtown Centralia	Centralia, IL

EARLY AMERICAN CARILLONNEURS AND THEIR MUSIC

No carillon music has been preserved from the pen of Charles W. H. Bancroft--America's first known carillonneur--who played the Van Aerschodt carillon in Philadelphia during the first four decades of this century. It is only natural that the earliest examples of carillon composition by Americans reflect the Flemish style of performance and writing. This is evident in some music of Frank Percival Price (1901-85) who was appointed to play the carillon at the Metropolitan Methodist Church in Toronto when it was installed in 1922. In 1927 he was the first North American to receive a diploma from the Belgian Carillon School. Several other Americans and Canadians studied at and received diplomas from the Belgian school in the 1930's: Arthur Bigelow ('32), Henry Wesson ('32), John Vaichaitis ('34), Wilmot Pratt ('36), Frederick Marriott ('36), Sydney Giles ('37), and Robert Donnell ('38). Of those who wrote music for the carillon, none was trained in the discipline of composition, and their pieces are of little musical consequence.

---

[39]"Directory of Carillon of North America 1991" (Guild of Carillonneurs in North America, 1991).

The only estimable music to be written in America for the carillon before WWII was composed in 1931 by three students of Rosario Scalero of the Curtis Institute of Music in Philadelphia: Nino Rota, Gian-Carlo Menotti, and Samuel Barber. That conservatory was founded by Mary Louise Curtis Bok whose husband, Edward William Bok, provided for the Mountain Lake Sanctuary and "the most beautiful Carillon Tower in the world."[40] The school's curriculum included carillon study, for which students went to Florida. In 1934, G. Schirmer published Rota's *Campane a Sera* and *Campane a Festa*, Menotti's *Preludio*, *Arabesque*, *Dialogue*, *Pastorale*, *Canzona*, and *Etude*, and Barber's *Suite.* Rota's *Novena di Natale*, and Barber's *Legend*, *Dirge*, and *Allegro* were published in 1992 by the GCNA.

A NORTH AMERICAN CARILLON MOVEMENT

Although virtually all of the significant instruments in America have been imported from Europe, and despite the trend for early American carillonneurs to seek an education abroad, a truly autonomous school of carillon composition has developed on this continent. Several factors have contributed to this development. The role of the carillon and its music is different in America than in Europe. The sonic characteristics of the Flemish and Dutch carillons which pervade Europe are different from the sonic characteristics of the English instruments which are located primarily in North America. The proximity of American carillons to each other, their ownership, their tuning, their compass, and their integrity of construction all differ from their European counterparts. An examination of each of these factors will reveal, in part, the nature of the North American school.

---

[40]Edward W. Bok, *America's Taj Mahal; The Singing Tower of Florida* (Tate, GA: Georgia Marble Co.; repub., Lake Wales, FL: Bok Tower Gardens Foundation, 1989).

The primary European function of carillon music as marketplace entertainment has no equivalent in American culture. Coupled with the fact that folksongs play a generally more important role in Netherlandic culture than in American, it is clear that, in America, the carillon is not a folk instrument. Without thinking, some carillonneurs have attempted to transfer this stigma from the Old World to the New. Compositions based on folk music tend only to be successful to the extent of their inherent musical quality, for any familiarity with their folkloric basis is generally limited to a specific region.

Whereas most European carillons are owned by municipalities, the majority of American instruments are the property of religious or educational institutions. Hence, a more scholarly approach to composition has been taken here, and a portion of the American repertoire is based on hymnody.

Virtually all carillons in America were tuned in equal temperament, thereby freeing American composers from the limitations of earlier tuning systems. Furthermore, the majority of instruments on this continent were constructed with considerably more tonal and mechanical integrity. Although the Netherlands acquired many new carillons after WWII, it and Belgium were still left with the remnants of several centuries of inferior technology, outmoded tuning systems, false intonation, and collections of bells which do not sound as cohesive, even series.

In great contrast with the close proximity of European carillons, most American carillonneurs find themselves quite isolated from their colleagues. Especially during the earlier years of the American movement, the more primitive modes of transportation and communication limited contact and precluded the dissemination of any one particular musical style. The most prominent American carillon composers have developed styles totally independent of European styles, melding their individual personal approaches to

composition with their own conceptions of the carillon's sonorous capabilities.

The most prolific and the most distinctive American carillon composers have been associated with English carillons, which have a unique sonic character. The heavier profile of English bells results in a massive, rich, resonant sonority in the bass, and a robust midrange. The English have never been successful, however, in producing brilliant, resonant treble bells. They exploited, therefore, their forte by extending the bass range of their instruments. In that the partials of bells become more prominent as the pitch becomes deeper, the minor-third partial is much more conspicuous in their instruments.

In taking these unique characteristics into account, several American composers have developed effective, idiomatic, distinguished styles. Several composers, mostly non-carillonneurs, have adopted an octotonic scale (alternating half- and whole-steps) as the basis for their carillon works. The resulting sonorities have proven to be singularly harmonious on the carillon. In that any interval in an octotonic scale that is two scale degrees apart is a minor-third, this scale is remarkably congruous with the harmonic series of carillon bells. In 1953, John Pozdro was the first to take advantage of this phenomenon in his *Landscape*. Other notable composers have followed suit: Roy Hamlin Johnson, Gary White, Daniel Robins, and John Courter.

Carillonneurs Ronald Barnes and Milford Myhre have adhered to a traditional, functional harmonic approach, addressing rather the resonant quality of the bells in an idiomatic fashion. This often results in textures where melodic material is reserved for the large, bass bells; for accompanimental figures, florid passagework in the trebles serves to sustain their otherwise unresonant sound. A common variation of this texture places melodic material in the midrange, adding an independent bass part. Percival Price, though, was perhaps the first to recognize the suitability of the bass and tenor

range for melodic material.

Numerous other composers have made a wide variety of contributions to the carillon repertory. The prolific output of Canadian carillonneur Emilien Allard shows a mixture of musical styles, as well as the influence of Olivier Messiaen, with whom he studied. Also prolific was the Dutch, non-carillonneur Johan Franco who became an American citizen. Worthy of mention for the diversity their pieces have contributed to the repertory are John Cage, George Crumb, Daniel Pinkham, Alan Hovhaness, Easley Blackwood, Gunther Schuller, and Richard Felciano. The carillon has not eluded 20th-century compositional techniques. Aleatory is found in pieces by Cage, Johnson and Felciano; Johnson's 1956 *Sonata* is a serial work.

A myriad of juxtaposed components constitute today's carillon art. A knowledge of the carillon's origins, development, and evolution makes possible a greater appreciation of the unique elements which distinguish these component parts and serves to place the art as a whole into a greater perspective. May this document serve as a cohesive introduction to the major aspects which have shaped the present state of the carillon art as it enters the 21st century.

SELECTED BIBLIOGRAPHY

Alfonso X, King of Castile and Leon. *La música de las Cantigas de Santa María.* Facsimile and critical study by Higinio Anglés. Barcelona: Diputación Provincial de Barcelona: Biblioteca Central, 1964.

Anthology of North American Carillon Compositions; Vol. I, 1922-1941. Compiled and edited by Ronald Barnes. Guild of Carillonneurs in North America, 1992.

Apel, Willi. *Harvard Dictionary of Music.* 2d ed. Cambridge, MA: Harvard University Press, 1972.

Barnes, Ronald. "The Carillon Repertory of André Jean Baptiste Dupont." *Bulletin of the Guild of Carillonneurs in North America* 11, no. 2 (December 1958): 20-38.

_____. "Matthias van den Gheyn." *Bulletin of the Guild of Carillonneurs in North America* 10, no. 1 (June 1957): 11-20.

_____. *Matthias van den Gheyn and his Preludes for Carillon.* Master's thesis, Stanford University, 1961.

_____. "The North American Carillon Movement." *Bulletin of the Guild of Carillonneurs in North America* 36 (January 1987): 20-36.

[_____]. "Some Remarks on the Van Elewyck Copy of the Carillon Preludes of Matthias van den Gheyn." *Bulletin of the Guild of Carillonneurs in North America* 5, no. 2 (June 1952): 1-9.

Beiaardkunst; Handelingen van het Eerste Congres, Mechelen 1922. Mechelen: L. Godenne, 1922.

Bergen, Harmannus H. van. "The Van Bergens, Bell-founders, Past, Present and Future." *Bulletin of the Guild of Carillonneurs in North America* 30 (January 1981): 27-33.

Bergh, Gaston van den. "Chronologische lijst van gediplomeerde oud-leerlingen - Niet-gediplomeerde oud-leerlingen van de Beiaardschool." In *Jubileumboek 1922-1972; Koninklijke Beiaardschool Jef Denyn te Mechelen* 195-273. Mechelen: Koninklijke Beiaardschool, 1973.

Berry, Alan P.S. "Carillons of the British Isles." *Bulletin of the Guild of Carillonneurs in North America* 29 (January 1980): 23-32.

Bigelow, Arthur Lynds. *Carillon; An Account of the Class of 1892 Bells at Princeton with Notes on Bells and Carillons in General.* Princeton: Princeton University Press, 1948.

_____. "The Nieuwport Carillon." *Bulletin of the Guild of Carillonneurs in North America* 8, no. 1 (January 1954): 29-34.

Bok, Edward W. *America's Taj Mahal; The Singing Tower of Florida.* Tate, GA: Georgia Marble Co., 1929; reprint, Lake Wales, FL: Bok Tower Gardens Foundation, 1989.

_____. *Perhaps I Am.* New York: Scribner, 1928.

Boogert, Loek. "Institutions." In *Forty-five Years of Dutch Carillons 1945-1990*, 46-61. Asten, NL: Netherlands Carillon Society, 1992.

_____. "Seven centuries." In *Forty-five Years of Dutch Carillons 1945-1990*, 12-25. Asten, NL: Netherlands Carillon Society, 1992.

Book on Bells. Watervliet, West Troy, NY: Meneely & Co., 1912.

Bossin, Jeffery. *Die Carillons von Berlin und Potsdam; Fünf Jahrhunderte Turmglockenspiel in der Alten und Neuen Welt.* Berlin: Stapp, 1991.

Bulletin of the Guild of Carillonneurs in North America 1 (October 1940).

Burney, Charles. *The Present State of Music in Germany, the Netherlands and United Provinces.* 2d ed. London, 1775; reprint, New York: Broude Brothers, 1969.

Cake, Peter. "Taylor True-harmonic System." *Bulletin of the Guild of Carillonneurs in North America* 37 (January 1988): 24-25.

Camp, John. *In Praise of Bells; The Folklore and Traditions of British Bells.* London: Robert Hale, 1988.

Cosaert, Koen. *Jef Denijn; grondlegger van een nieuwe beiaardkunst.* Mechelen: n.p. (Master's thesis, Catholic University of Louvain), 1987.

Coster, Henry de. "De Beiaardschool." In *Beiaardkunst; Handelingen van het Eerste Congres*, 83-87. Mechelen: L. Godenne, 1922.

_____. "Henry de Coster aan Willy Godenne, Pour servir à l'édification de l'Histoire (1949)." In *Jubileumboek 1922-1972; Koninklijke Beiaardschool Jef Denyn te Mechelen*, 164-185. Mechelen: Koninklijke Beiaardschool, 1973.

Cram, Ralph Adams. "Christ Church Bells." In *Bells: Their History and Romance*, ed. Gouverneur [Merion] Morrison. Santa Barbara: J.F. Rowny Press, 1932.

Denyn, Jef. "Beiaardklavieren." In *Beiaardkunst; Handelingen van het Tweede Congres*, 126-147. 's-Hertogenbosch: 1925.

_____. "Technique et mécanisme du carillon." In *Gedenkboek Jef Denyn*, 123-134. Mechelen: Koninklijke Beiaardschool, 1947.

_____. "Wat zal de Beiaard spelen?" In *Beiaardkunst; Handelingen van het Eerste Congres*, 101-112. Mechelen: L. Godenne, 1922.

De Turk, William. "Meneely Bells; An American Heritage." *Bullètin of the Guild of Carillonneurs in North America* 27 (April 1978): 30-61.

_____. "William Gorham Rice and the North American Carillon Movement." *Bulletin of the Guild of Carillonneurs in North America* 39 (January 1990): 14-37.

"Documents relating to the Incorporation of the Guild." *Bulletin of the Guild of Carillonneurs in North America* 15, no. 1 (December 1963): 22-28.

Donnell, Robert. "The Carillons of North America." *Bulletin of the Guild of Carillonneurs in North America* 2, no. 2 (April 1948): 5-36.

Doorslaer, G. van. "Aandeel van België in de ontwikkeling van beiaard en beiaardkunst." In *Beiaardkunst; Handelingen van het Tweede Congres*, 52-69. 's-Hertogenbosch: 1925.

_____."Ontstaan van het eerste beiaardklavier." In *Beiaardkunst; Handelingen van het Eerste Congres*, 113-120. Mechelen: L. Godenne, 1922.

_____. "Samenwerking van klokgieter en uurwerkmaker of werktuigkundige als factor bij de ontwikkeling der beiaarden." In *Beiaardkunst; Handelingen van het Eerste Congres*, 120-123. Mechelen: L. Godenne, 1922.

Edwards, George Wharton. *Vanished Towers and Chimes of Flanders*. Philadelphia: Penn, 1916; reprint, 1925.

Elewyck, Xavier van. *Matthias van den Gheyn, le plus grand Organiste et Carillonneur belge du XVIIIe siècle, et les célèbres fondeurs de cloches de ce nom depuis 1450 jusqu'à nos jours*. Paris: Librairie de P. Lethielleux, 1862.

Enkelaar, Henk. "Institutions." In *Forty-five Years of Dutch Carillons 1945-1990*, 62-67. Asten, NL: Netherlands Carillon Society, 1992.

Enschedé, J.W. *Dertig jaren muziek in Holland (1670-1700)*. Haarlem, Vincent Loosjes, 1904.

Eyck, Jacob van. *Der Fluyten Lust-hof*. 1644; reprint, ed. Winfried Michel and Hermien Teske. Winterthur, Switz.: Amadeus, 1984.

Félix, Jean Pierre. *Le recueil d'hymnes et chansons arrangés par Théodore de Sany pour*

le carillon de Bruxelles en 1648. Brussels: Le Pré Frambay, 1990.

Fleming, William. *Arts and Ideas.* New York, Holt, Rinehart and Winston, 1974.

Garnier, Henri. *Les carillons de France.* Dijon: Association des Amis des Carillons, 1985.

Gilman, Martin A. "Our Lady of Good Voyage Church Carillon." *Bulletin of the Guild of Carillonneurs in North America* 23 (November 1972): 37-43.

Godenne, Willy. "An Appreciation of William Gorham Rice." *Bulletin of the Guild of Carillonneurs in North America* 29 (January 1980): 33-43.

_____. "Historische kanttekeningen over de Beiaardschool." In *Jubileumboek 1922-1972; Koninklijke Beiaardschool Jef Denyn te Mechelen*, 9-60. Mechelen: Koninklijke Beiaardschool, 1973.

_____. "The undelivered speech of Willy Godenne to Mr. Milford Myhre." In *Jubileumboek 1922-1972; Koninklijke Beiaardschool Jef Denyn te Mechelen*, 330-338. Mechelen: Koninklijke Beiaardschool, 1973.

Goguet, Jacqueline. *Le Carillon des origines à nos jours.* Paris: Le Cerf-Volant, 1958.

Grout, Donald Jay, and Claude Palisca. *A History of Western Music.* 3d ed. New York: Norton, 1980.

Gruÿtters, Joannes de. *Andanten, marchen, gavotte, ariaen, giuen, corenten, contre-dansen, allegros, preludies, menuetten, trion, &.&. voor den beÿaert ofte klok-spil.* Antwerp: n.p., 1746; Facsimile with Foreward by Arie Abbenes and André Lehr. Amsterdam: Broekmans & Van Poppel, 1971.

Haazen, Jo. *Klokken hebben hun geheimen.* Bierbeek, BG: Zonneschool, n.d.

_____. *Rond de zingende toren.* Antwerp: De Vlijt, 1979.

Halsted, Margo. "*Beÿaert 1728*; A Historical and Bibliographical Approach." In *Aspecten van de 18de-eeuwse beiaardkunst in de Nederlanden*, 9-19. Peer, BG: Musica, 1985.

Hammerstein, Reinhold. *Macht und Klang: Tönende Automaten als Realität und Fiktion in der alten und mittelalterlichen Welt.* Bern: Francke Verlag, 1986.

Hart, Leen 't. *Campanology; A Handbook for the Carillonneur.* Translated by Hudson Ladd. Ann-Arbor: University of Michigan, 1972.

Haweis, H.R. *Music and Morals.* 4th ed. London: Strahan, 1873.

Hemony, Pieter. *De On-Noodsakelijkheid en Ondienstigheid van Cis en Dis in de Bassen der Klokken.* Delft: Pieter Oosterhout, 1678; Facsimile, Asten, NL: Eijsbouts, 1964.

Hugo, Victor. *Livres Poétiques complètes.* Compiled by Francis Bouvet. Paris: Jean-Jacques Pauvert, 1961.

Huybens, Gilbert. "De liederen uit *Beÿaert 1728.*" In *Aspecten van de 18de-eeuwse beiaardkunst in de Nederlanden*, 21-70. Peer, BG: Musica, 1985.

James, Stanley. "The Metropolitan Church Carillon, Toronto." *Bulletin of the Guild of Carillonneurs in North America* 3, no.2 (October 1940): 23-24.

Jennings, Trevor S. *Bellfounding.* Bucks, UK: Shire, 1988.

Kampen, N. G. van. *The History and Topography of Holland and Belgium.* Translated by William Gray Fearnside. London: George Virtue, n.d.

[Keyser, Edward de]. "Nationale Beiaardschool. Voorloopig prospectus (1913)." In *Jubileumboek 1922-1972; Koninklijke Beiaardschool Jef Denyn te Mechelen*, 77-81. Mechelen: Koninklijke Beiaardschool, 1973.

Kossmann-Putto, J.A., and E.H. Kossmann. *The Low Countries; History of the Northern and Southern Netherlands.* Rekkem, BG: Stichting Ons Erfdeel, 1987.

Lannoy, Maurice. "Jef Denyn et les carillons de France." In *Gedenkboek Jef Denyn*, 175-184. Mechelen: Koninklijke Beiaardschool, 1947.

Lawson, James R. "North America's First Carillon." *Bulletin of the Guild of Carillonneurs in North America* 35 (January 1986): 19-22.

Lefévere, Kamiel. *Bells over Belgium.* New York: Belgian Government Information Center, 1949.

_____. "A New Development in Carillons: Nieuwport, Belgium." *Bulletin of the Guild of Carillonneurs in North America* 8, no. 1 (January 1954): 22-28.

Lehr, André. "Acoustic research." In *Forty-five Years of Dutch Carillons 1945-1990*, 132-145. Asten, NL: Netherlands Carillon Society, 1992.

_____. *Beschouwingen over de akoestiek van de klokkenkamer.* Asten, NL: Eijsbouts, 1964.

_____. *Leerboek der campanologie; een muzikaal-technische verhandeling over luidklokken en beiaarden.* Asten, NL: Nationaal Beiaardmuseum, 1976.

_____. "'Met losgemaakte ringkraag en in hevig zweet'. Een oriënterende

verkenning in oude beiaardtracturen." In *Aspecten van de 18de-eeuwse beiaardkunst in de Nederlanden*, 109-220. Peer, BG: Musica, 1985.

_____. "Reactie op het NKV-standpunt inzake de grote-terts-klok." *Klok en Klepel*, no. 47 (December 1991): 32-37.

_____. "Restoration of historic carillons." In *Forty-five Years of Dutch Carillons 1945-1990*, 74-89. Asten, NL: Netherlands Carillon Society, 1992.

_____. *Van paardebel tot speelklok; de geschiedenis van de klokgietkunst in de Lage Landen.* 2d ed. Zaltbommel, NL: Europese Bibliotheek, 1981.

Lehr, André, Wim Truyen and Gilbert Huybens. *Beiaardkunst in de Lage Landen.* Tielt, BG: Lannoo, 1991.

Het Liedeken van de Lovenaers; Een 18de-eeuws Leuvens beiaardhandschrift. Facsimile with a Foreward by Luc Rombouts and Gilbert Huybens. Louvain: Universitaire Pers Leuven, 1990.

Lombaert, Aimé. "Grote terts < > kleine terts." *Bondsnieuws*, no. 104 (January 1992): 100-101.

Luykx, Th., and H.W.J. Volmuller. *Geschiedenis van Nederland en België.* Utrecht: A. Oosthoek, 1968.

Maassen, Jacques. "Music and playing. In *Forty-five Years of Dutch Carillons 1945-1990*, 90-123. Asten, NL: Netherlands Carillon Society, 1992.

Marcuse, Sibyl. *Musical Instruments: A Comprehensive Dictionary.* Garden City, NY: Doubleday, 1964.

Matthew, George, Jr. "Bellfounding in America." In *1990 GCNA Congress*, 44-69. Washington, D.C.: Washington National Cathedral, 1990.

Mersenne, Marin. *Harmonie universelle; contenant la théorie et la pratique de la musique.* Paris, 1636; Facsimile, Paris: Centre National de la Recherche Scientifique, 1965.

Mette, Karel de. "De beiaardtechniek in verband met de beiaardkunst." In *Beiaardkunst; Handelingen van het Eerste Congres*, 70-82. Mechelen: L. Godenne, 1922.

Milsom, Michael J. "John Taylor & Co. and Canon Simpson." *Bulletin of the Guild of Carillonneurs in North America* 32 (January 1983): 19-20.

Morgenstern, Christian. *Werke und Briefe.* Stuttgart: Urachhaus, 1990.

Morris, Ernest. *Legends O' the Bells: being a collection of legends; traditions; folk tales,*

Rottiers, Jef. *Beiaarden in België.* Mechelen: Beiaardschool, 1952.

Sadie, Stanley, ed. *The New Grove Dictionary of Music and Musicians.* London: Macmillan Publishers Ltd., 1980. S.v. "Bell," by Percival Price.

Schiller, Friedrich. *Sämtliche Werke.* Edited by Hans-Günther Thalheim. Vol. 1, *Gedichte.* Berlin & Weimar: Aufbau, 1980.

Schilling, Margarete. *Glocken und Glockenspiele.* Rudolstadt: Prisma, 1982.

Schroeder, Ira. "A History of the Edgar W. and Margaret MacDonald Stanton Memorial Carillon." *Bulletin of the Guild of Carillonneurs in North America* 10, no. 1 (June 1957): 1-10.

_____. "A New and Expanded History of the Edgar W. and Margaret MacDonald Stanton Memorial Carillon." *Bulletin of the Guild of Carillonneurs in North America* 37 (January 1988): 15-37.

Simpson, Arthur B. "On Bell Tones." *The Pall Mall Magazine* 7, no. 30 (October 1895): 183-194.

_____. "On Bell Tones; No. 2." *The Pall Mall Magazine* 10, no. 41 (September 1896): 150-155.

_____. *Why Bell Tones Sound Out of Tune and How to Cure Them.* London: Skeffington & Son, 1897.

Springer, L. Elsinore. *That Vanishing Sound.* New York: Crown, 1976.

Staercke, A.E. de. *Cloches et Carillons; L'Histoire folklorique des Cloches.* Brussels: Stella Viarum, 1947.

Starmer, William Wooding. "Carillons." *The Musical Times and Singing-Class Circular* 56, no. 866 (1 April 1915): 201-206.

_____. "English Carillons." *The Musical Times and Singing-Class Circular* 56, no. 868 (1 June 1915): 330-335.

_____. "The influence of Mechlin carillon art on English bell founders and bell music." In *Beiaardkunst; Handelingen van het Eerste Congres*, 66-69. Mechelen: L. Godenne, 1922.

Straeten, Edmond vander. *La Musique aux Pays-Bas avant le XIXe siècle.* Brussels: 1867-88; reprint, New York: Dover, 1969.

Truyen, Wim. "A bell atlas." In *Forty-five Years of Dutch Carillons 1945-1990*, 168-

177. Asten, NL: Netherlands Carillon Society, 1992.

_____. "Carillons in the Netherlands." In *Forty-five Years of Dutch Carillons 1945-1990*, 226-239. Asten, NL: Netherlands Carillon Society, 1992.

Valerius, Adriaen. *Nederlandtsche Gedenck-clanck*. Haarlem; 1626; reprint, Amsterdam: Wereldbibliotheek, 1943.

Verheyden, Prosper. "Het Beiaardrepertorium van Joannes de Gruytters (Antwerpen, 1746)." In *Beiaardkunst; Handelingen van het Eerste Congres*, 149-186. Mechelen: L. Godenne, 1922.

_____. *Beiaarden in Frankrijk*. Antwerp: De Sikkel, 1926.

Vermoortel, Frans. *Mechelen, Sint-Romboutstoren en zijn beiaarden*. Bruges: Marc van de Wiele, 1987.

Vernet, Marc. *Les Carillons du Valais*. e. G. Krebs. Bâle: Société suisse des traditions populaires, 1965.

Volckerick, Joannes Franciscus. *Préludes Mélodiques voor beiaard 1841*. Edited by, and with Foreward by Jaap van der Ende. Dordrecht, NL: Werkgroep Beiaard, 1990.

Waard, Romke de. "Carillon art." In *Forty-five Years of Dutch Carillons 1945-1990*, 26-45. Asten, NL: Netherlands Carillon Society, 1992.

Wachters, Louis. *Jef Denyn en de beiaard*. Louvain: Davidsfonds, 1938.

Waesberghe, Jos. Smits van. *Cymbala (Bells in the Middle Ages)*. Rome: American Institute of Musicology, 1951.

Watson, Richard. "Tuning Talents of the Meneely Firms." Quoted in James B. Slater. "The 1980 GCNA Congress." *Bulletin of the Guild of Carillonneurs in North America* 30 (January 1981).

Webber, F.R. "The Carillon Invades America." *American Mercury* (May 1933). Quoted in William De Turk. "Meneely Bells; An American Heritage." *Bulletin of the Guild of Carillonneurs in North America* 27 (April 1978).

Werveke, A. van. "De ontwikkeling van het klokkenspel te Gent." In *Beiaardkunst; Handelingen van het Eerste Congres*, 124-135. Mechelen: L. Godenne, 1922.

CURRICULUM VITAE

NAME: Brian Thomas Swager

BIRTH: Canton, Ohio. 12 April 1959

EDUCATION: Indiana University, Bloomington, Indiana, Doctor of Music (Organ) 1993

Conservatoire National de Région, Rueil-Malmaison, France, Premier Prix, Organ, 1987

Koninklijke Beiaardschool "Jef Denyn", Mechelen, Belgium, Final Diploma, 1986

Indiana University, Master of Music (Organ), 1984

University of Akron, Akron, Ohio, Bachelor of Music (Organ), 1982

MUSIC INSTRUCTORS:

ORGAN:
Larry Smith, Indiana University
Marie-Claire Alain, France
Flor Peeters, Belgium
Richard Shirey, University of Akron

CARILLON:
Jo Haazen, Belgium
Linda Walker Pointer, Indiana University

HONORS AND AWARDS: Second-place winner, Queen Fabiola International Carillon Competition, Belgium, 1990

French Government Scholarship, 1986-87

Fulbright Grant, 1984-86

First-place winner, 1984 Student Competition, Chicago Chapter, American Guild of Organists

PROFESSIONAL: American Guild of Organists

Guild of Carillonneurs in North America

Student Examination Committee
Discography Committee
Contributing Editor, *Carillon News*

Carillon Editor, *The Diapason*

myths, etc., centred around the bells of all lands. London: Sampson Low, Marston & Co., [1935].

Morrison, Gouverneur [Merion], ed. *Bells: Their History and Romance.* Santa Barbara, J.F. Rowny Press, 1932.

Müller, Remy. "The Philadelphia Carillons." *Bulletin of the Guild of Carillonneurs in North America* 11, no. 1 (April 1958): 11-21.

Myhre, Milford. "The Development of the Art of the Carillon in North America." *Bulletin of the Guild of Carillonneurs in North America* 23 (November 1972): 25-35.

Nederlandse Klokkenspel-Vereniging. "NKV-standpunt inzake de grote-terts-klok." *Klok en Klepel*, no. 47 (December 1991): 29-32.

Poultney, David. *Studying Music History; Learning, Reasoning, and Writing about Music History and Literature.* Englewood Cliffs, NJ: Prentice-Hall, 1983.

Price, Percival. *Bells and Man.* Oxford: Oxford University Press, 1983.

_____. "The Bells Came Down": *The Quarterly Review.*

_____. *The Carillon.* Oxford: Oxford University Press, 1933.

Raven, J.J. *The Bells of England.* New York: E.P. Dutton, 1906.

Rayleigh, Lord. "On Bells." *The London, Edinburgh, and Dublin Philosophical Magazine and Journal of Science* 5th ser., 29, No. 176 (January 1890): 1-17.

Rice, William Gorham. *The Carillon in Literature; A Collection from Various authors with Some Notes on the Carillon Art.* New York: John Lane, 1915; reprint, 1916.

_____. *Carillon Music and Singing Towers of the Old World and the New.* New York: Dodd, Mead and Co., 1925; reprint, London: John Lane, 1926.

_____. *Carillons of Belgium and Holland; Tower Music in the Low Countries.* New York: John Lane, 1914.

_____. "The Growth of the interest in Carillons in the United States." In *Beiaardkunst; Handelingen van het Eerste Congres*, 21-30. Mechelen: L. Godenne, 1922.

Rossing, Thomas D., and Neville H. Fletcher. *The Physics of Musical Instruments.* New York: Springer, 1991.